Integrating QuakeSim and InSAR into HAZUS-MH and OpenSHA Disaster Management for Earthquakes

Principal Investigator:
Andrea Donnellan
Jet Propulsion Laboratory
Mail Stop 183-335
4800 Oak Grove Drive
Pasadena, CA 91109-8099
donnellan@jpl.nasa.gov
818-354-4737

Co-Investigators:

John Rundle
University of California, Davis
Department of Physics
One Shields Avenue
Davis, CA 95616-8677
rundle@physics.ucdavis.edu
530-752-6416

Geoffrey Fox and Marlon Pierce
Community Grid Computing laboratory
Indiana University
501 N. Morton, Suite 224
Bloomington, IN 47404-3730
gcf@indiana.edu
812-856-7977

Lisa Grant
University of California, Irvine
Environmental Analysis and Design
Irvine, CA 92697-7070
lgrant@uci.edu
949-824-5491

Dennis McLeod
University of Southern California
Mail Code 0781
3651 Trousdale Parkway
Los Angeles, CA 90089-0742
mcleod@pollux.usc.edu
213-740-7285

Total Budget: $1,787.5K

Year 1: $575.8K **Year 2:** $601.1K **Year 3:** $610.5K

Integrating QuakeSim and InSAR into HAZUS-MH and OpenSHA Disaster Management for Earthquakes

Table of Contents

Summary of Proposal Personnel and Work Efforts

We will develop a Solutions Network to use NASA products for improved decision support for earthquake hazard assessment and mitigation.

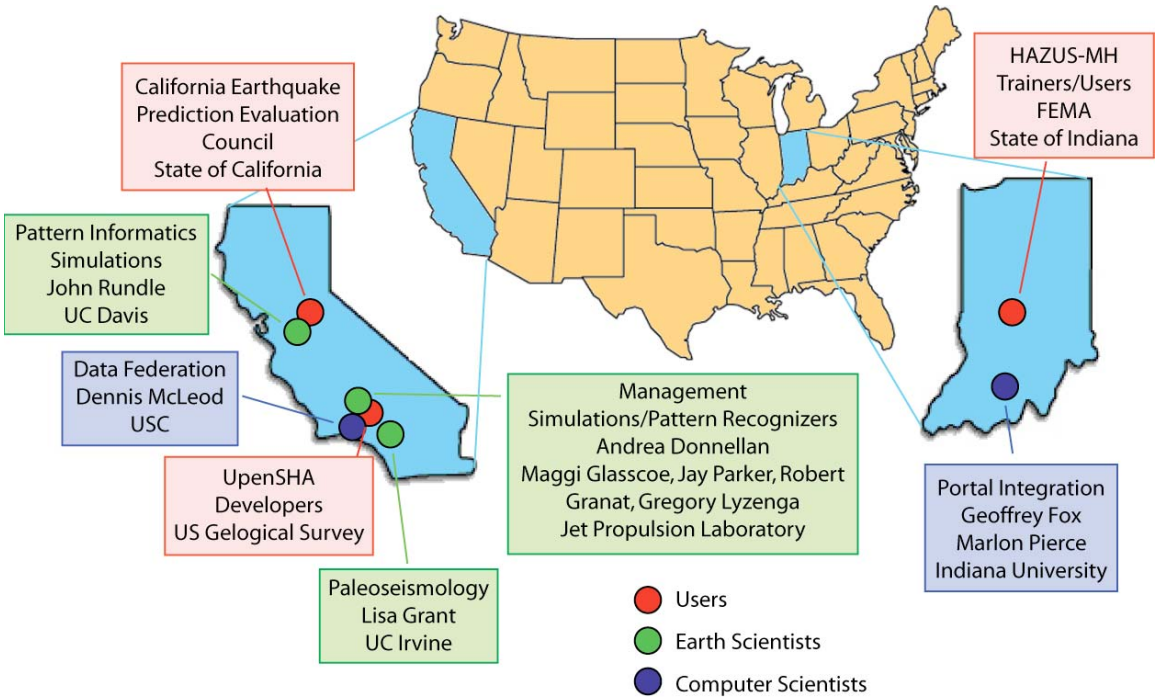

Figure 1. Proposed Solutions Network showing users, scientists, and computational infrastructure developers.

This work will form a multi-institutional team composed of state and government agencies, academia, and NASA's Jet Propulsion Laboratory (Figure 1). There will be three primary tasks associated with the activity. 1) The main goal will be to establish a robust solutions network, which will require establishing solid working relationships with the users in the state and federal governments. This work builds on work carried out under NASA's QuakeSim and SERVO (Solid Earth Research Virtual Observatory). These projects have already established excellent working relationships between the geophysical researchers and computational scientists on our team. The proposed project will now add the end user into the network. 2) Our second task will be to improve and validate our forecasting and simulation tools with oversight from our state and federal partners. This will include adding new NASA data such as GPS and planned InSAR data into the decision support tools pipeline. 3) Last, we will continue to improve the computational infrastructure, which included federating data, deploying web services, and building a component-based portal for accessing data and simulation tools.

Proposal personnel are outlined in figure 1. Graduate students and postdoctoral associates will participate in the work carried out by the four participating universities. The work directly addresses the National Priority of Disaster Management for earthquakes.

Decision Support Overview/Baseline

HAZUS-MH Earthquake Module – A Decision-Support Tool

The Federal Government has developed HAZUS-MH as a Geographical Information System (GIS)-based planning tool for emergency managers to address a fundamental question: As earthquakes, hurricanes, and floods continue to occur, how can we plan to minimize damage and loss of life from these natural events to ensure that natural hazards do not become large-scale, catastrophic natural disasters? This software provides a means to convey risk to the public so that communities can be informed and motivated to respond appropriately through better hazard planning, preparation, mitigation, and response. The HAZUS-MH software is designed to be easy and quick to use, given a familiarity with the software.

FEMA oversees HAZUS-MH activities at large, whereas the National Institute of Building Sciences (NIBS) manages this tool's development and implementation for use by the Federal, State, and Municipal emergency management community. FEMA initially released HAZUS in 1999 primarily as a tool for earthquake disaster risk assessment.

A sizeable and diverse team including the following members oversees software development: (1) FEMA Mitigation Directorate; (2) NIBS, which is in charge of project management; (3) expert committees that provide technical and expert oversight; and (4) leading firms in loss estimation (e.g., ARA, Inc.) that are in charge of technical and software development, pilot studies, and model calibration/validation. The expert oversight committees consist of several Federal agencies, many universities, some state agencies, and multiple consulting firms. In addition, FEMA is providing software training and education, plus technical support in the use of the HAZUS-MH.

ARA et al. [2003] estimated the total HAZUS-MH user base to be over 1700 prior to the 2003 release of the Hurricane and Flood modules and expected this user base to grow to over 9000 end users when these two modules came on line. HAZUS User Groups now exist in several states and/or regions of the country. These user groups hold meetings and maintain Web sites to exchange information on applications of the HAZUS-MH software (see http://www.fema.gov/hazus/us_main.shtm for additional information).

Each hazard-specific module includes a basic functionality common to all HAZUS natural hazards loss estimation software, plus additional functionality unique to the particular hazard (e.g., earthquake). Each HAZUS-MH module (earthquake, wind and flood) allows the user to map, assess, and display geospatial data pertaining to a specific natural hazard to assess and mitigate hazard risk. HAZUS-MH also enables estimation of physical damage to buildings, critical facilities, and other infrastructure. In addition, each hazard-specific module gives estimates of economic loss (e.g., lost jobs, business interruption, repair costs, construction costs) and social impacts (e.g., identifying requirements for shelters and medical aid). HAZUS-MH allows end users (1) to assess hazard vulnerability to identify areas requiring additional planning consideration; (2) to assess pre-disaster preparedness and readiness; (3) to compute potential losses from assorted hazard events, such as pre-event, near real-time, and post-event reporting scenarios; (4) to determine resource allocation needed for most effective response and

recovery; and (5) to prioritize implementation of mitigation measures required to reduce/mitigate future losses.

Scenario earthquakes describe the expected ground motions and effects of specific hypothetical large earthquakes. These are used in planning and coordinating emergency response, by utilities, emergency responders, and other disaster management agencies.

OpenSHA Decision Support Tool

OpenSHA is an effort to develop object-oriented, web- & GUI-enabled, open-source, and freely available code for conducting Seismic Hazard Analyses (SHA) (http://www.opensha.org). The goal of OpenSHA is to provide a framework where any arbitrarily complex (e.g., physics based) earthquake-rupture forecast, ground-motion, or engineering-response model can "plug in" for analysis without changing the basic code. The goal is also to enable the various SHA components to be geographically distributed over the internet with a user-friendly web interface. This infrastructure should significantly reduce the gap between cutting-edge geophysics and state-of-the-art hazard and risk evaluations. OpenSHA encourages participation from anyone in this development.

Seismic Hazard Analysis (SHA) depends on three types of models: 1) a forecast of all possible earthquake ruptures for the region; 2) a ground-motion model giving the level of shaking for each possible rupture; and 3) an engineering model of structural response given the ground shaking. Current implementations combine models (2) and (3) into what OpenSHA calls an "Intensity-Measure Relationship" which gives the conditional probability that an intensity measure (some functional of ground shaking found by engineers to correlate with damage) will be exceeded at a site given the occurrence of a specified earthquake rupture. Our proposed work should improve the forecasting of possible earthquake ruptures for a given region, which will feed directly into parts 2 and 3 of the OpenSHA methodology.

Measures/Indicators to Determine Quality of Decision Making

Earthquake forecasting currently is successful for 50-year outlook on 100 km scales. Any improvement in earthquake forecasting will greatly improve inputs to decision support tools such as HAZUS-MH and OpenSHA. Initial testing of our forecasting methodology, based on NASA developed tools and to be refined with NASA data, indicates success on 10 year, 20 km scales.

Reasons/Needs for Improvement

NASA Stennis Space Center has documented an evaluation of HAZUS-MH for hurricane loss estimation [NASA SSC, 2003]. The evaluation revealed that use of NASA remote sensing and modeling technologies have potential for improving the hurricane model. *Similarly, it is the expectation of this proposal team that NASA remote sensing and modeling technologies can enhance the earthquake model through better understanding of underlying physics and representation of ground motions through simulations and pattern recognition rather than statistical methods.*

Earth-Sun System Research Results

NASA has invested in the development of QuakeSim and SERVO [Donnellan, *et al.*, *2004*], the Solid Earth Research Virtual Observatory. The goal of QuakeSim was to develop a solid Earth science framework to better understand active tectonic and earthquake processes and to construct a fully interoperable system of tools for studying these processes (http://quakesim.jpl.nasa.gov). Three major high performance simulation tools, GeoFEST, PARK, and Virtual California [Parker, *et al.*, 2003], were developed under QuakeSim to model stress and flow in a realistic model of the Earth's crust, to study the slip on a fault associated with earthquakes, and to simulate interacting fault systems. In addition to the high performance software, the QuakeSim project developed and populated a fault database, QuakeTables, which contains basic data for California faults in formats suitable for input to QuakeSim simulation codes. The simulation software, pattern recognizers, and databases were wrapped with Web Services and clients to these tools were integrated into an interoperable web portal. The follow on project, SERVO, extended the portal, interoperable framework, and federated databases.

QuakeSim was sponsored by NASA's Computational Technologies Program. All of the milestones were successfully met, and the project completed in fall of 2005. The SERVO project, funded under NASA's Advanced Information Systems Technologies Program (AIST), will complete in spring of 2006, however, we will seek follow on funding in 2006. Through these projects we have developed a Web Services-based problem-solving environment that links together diverse earthquake science applications on distributed computers. This environment has expanded to include many more applications and tools – such as the major simulation tools, data inverse code, pattern recognition, database access, and visualization code. We also devoted significant effort in the AIST project to developing Geographical Information Systems (GIS) services, which we are integrating with several of the modeling and simulation codes through workflow tools [Aktas, *et al.*, 2004; Aydin, *et al.*, 2005; and Aktas, *et al.*, 2005a].

Particularly notable was the portal integration and use of the Pattern Informatics (PI) code that has successfully been used to forecast California seismic hotspot activity with an 11 km resolution. Of the most recent 18 "significant" earthquakes in California, 16 occurred within the forecast hotspots (http://quakesim.jpl.nasa.gov/scorecard.html) [Holliday, *et al.*, submitted]. After its integration into the QuakeSim portal, the PI code was used to forecast earthquakes in other regions of the world and to determine its sensitivity and range of application. It is integrated with GIS services and workflow tools [Aydin, *et al.*, 2005a].

NASA has invested in understanding existing InSAR data and in concepts for future NASA InSAR missions. The goal of an InSAR mission is to provide sound science for sound decisions. The process of enabling new sources of knowledge to be used by decision-makers requires partnering from the inception of the project, thereby optimizing the capacity to transfer research results effectively between the technology agency (NASA), the science agency (NSF), and mission (USGS, FEMA, and international) agencies [Zebker, *et al.*, 2005]. It is timely to integrate QuakeSim and SERVO functionality with existing and anticipated InSAR data into the HAZUS-MH earthquake model.

Technical/Scientific/Management

Objectives

We propose a solutions network for integrating NASA products into Federal Emergency Management Agency (FEMA), United States Geological Survey (USGS), and the State of California decision support tools. Tools are HAZUS-MH and OpenSHA. NASA products include expected Interferometric Synthetic Aperture Radar (InSAR) and GPS data, and QuakeSim and SERVO (Solid Earth Research Virtual Observatory), which include integrating datasets for forecasting and simulations using a portal.

HAZUS-MH is FEMA's risk assessment software for analyzing potential losses from floods, hurricane winds and earthquakes. Current scientific and engineering knowledge is coupled with the latest Geographic Information Systems (GIS) technology (from ESRI) to produce estimates of hazard related damage before, or after, a disaster occurs. OpenSHA is an object-oriented, web- & GUI-enabled, open-source, and freely available code for conducting Seismic Hazard Analyses (SHA) developed by the southern California Earthquake Center (SCEC) and the United States Geological Survey (USGS).

Technical Approach and Methodology

Our prototype solutions network will integrate the QuakeSim/SERVO team with end users, developers, and trainers of HAZUS-MH and OpenSHA. QuakeSim team members include geophysicists Andrea Donnellan (and team at JPL) and John Rundle (UC Davis), earthquake geologist Lisa Grant (UC Irvine), computational scientists Geoffrey Fox and Marlon Pierce (Indiana University), and computer scientist Dennis McLeod (USC). We will work with end users, trainers, developers, and promoters of HAZUS-MH and related decision support tools for seismic loss reduction from the states of Indiana (Neil Devadasan and Kevin Mickey of the Polis Center) and California (Michael Reichle and John Parrish, State Geologists; and several Members of the Seismic Safety Commission). We will also work with Ned Field, head of USGS development team for OpenSHA.

Activities will include regular meetings and involvement with the end users to test, improve, and integrate our tools. We will refine the forecasting and simulations methodology, improve the federated databases and interfaces, and refine the portal.

Proposed Network of Organizations

The project develops a true solutions network based on experts in widely disparate fields that include theoreticians, implementers, and end users. The QuakeSim/SERVO team has a long track record of working effectively together, and has so far achieved all of its milestones set forth. It is now timely to integrate QuakeSim products into decision support tools for earthquake hazard assessment, analysis, and loss estimation. QuakeSim/SERVO is at the correct stage for building a network of users, and in fact recent discussion has take place about infusing QuakeSim into the community. The Solutions Network will take place in concert with continued technical improvements to refine the portal and optimize it for use in HAZUS and OpenSHA. We will improve our forecast methodology and portal interface with input from the users and validators.

Integrated System Solution Chart

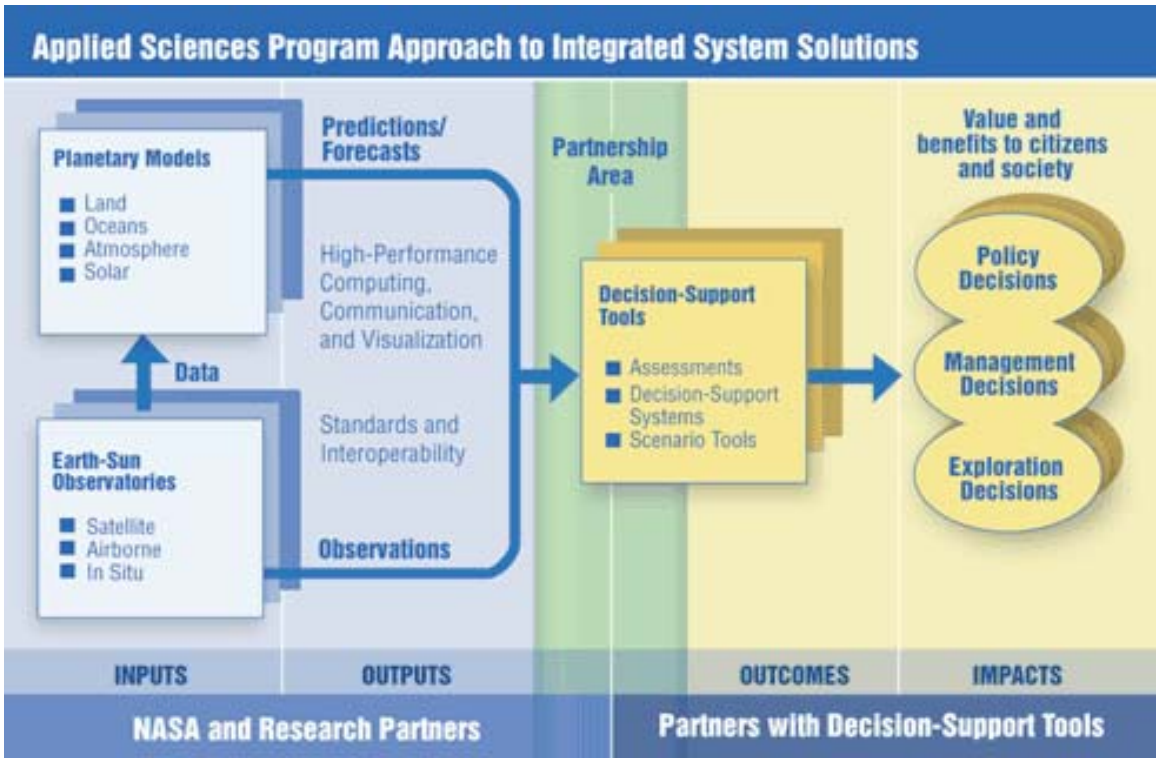

Architecture for this Project

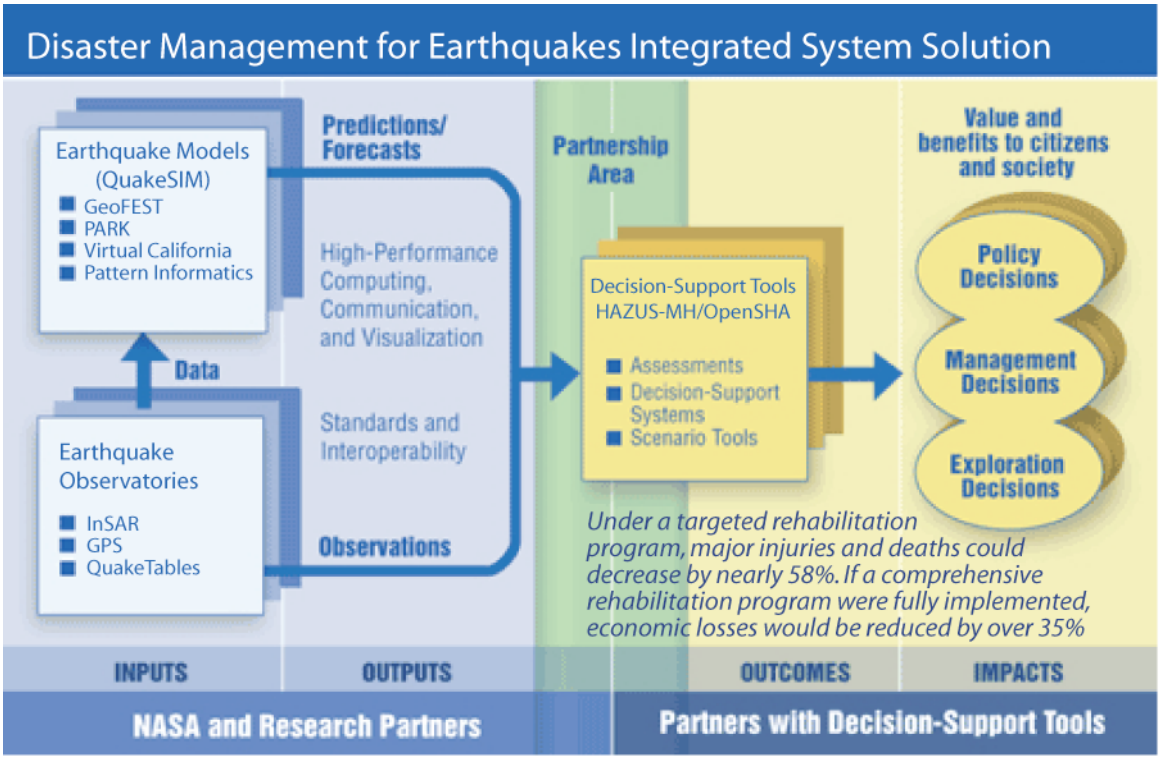

Relevance to NASA's Strategic Objectives and National Applications

This project addresses NASA's strategic objective to "Conduct a program of research and technology development to advance Earth observation from space, improve scientific understanding, and demonstrate new technologies with the potential to improve future operational systems." We will lay the groundwork to integrate data from a NASA InSAR (Interferometric Synthetic Aperture Radar) mission into the HAZUS-MH and OpenSHA decision support tools.

We will address the national application of Disaster Management. Extending QuakeSim and InSAR and GPS data will extend NASA science results and technology development for disaster management preparedness by improving inputs to hazard analysis, damage assessment, and loss estimates. We will focus here on earthquakes, a key component of this solicitation; however, this network can be extended to include volcanoes, landslides, subsidence, and flooding, particularly when systematic InSAR measurements become available.

The decision support tools will be improved by estimating potential sources from surface deformation data as well as simulation and modeling experiments. By partnering early we should more effectively address issues and prepare for new data, assuring sustained use of the solution network.

Integrating results

The components of QuakeSim/SERVO are ideally suited to feed directly into decision support tools. In fact, all of the components of QuakeSim fit directly into the NASA and Research Partners section of the Integrated System Solution Chart. It is now time to extend the project to the HAZUS-MH and OpenSHA user community. It was a goal of QuakeSim to develop tools for Observing System Simulation Experiments (OSSE) to generate simulated products of future sensors – in particular InSAR data. By working with the end-user community we will be able to test the value of these OSSEs as potential inputs to decision support tools. Concurrently we will be building a network of users, which should serve to bring NASA InSAR data much more quickly to a national benefit for decision support tools as soon as the data are available.

Once the size and location (epicenter) of a hypothetical earthquake is selected, the HAZUS software, using a series of mathematical formulas, calculates the violence of ground shaking, the amount of damage, the number of casualties, the number of people displaced by damaged structures, and the disruption and economic losses caused by the earthquake. These formulas describe the relationship between earthquake magnitude, violence of ground shaking, building and utility system damage, cost of repair, and indirect economic impact. HAZUS allows the user to change the size and location of the hypothetical earthquake to see the range of damage that may occur to the community. QuakeSim will allow for more accurate and realistic sources from which to carry out the calculations, and linking with QuakeTables will allow use of the latest relevant data about active faults

The goal of OpenSHA is to provide a framework where any arbitrarily complex (e.g., physics based) earthquake-rupture forecast, ground-motion, or engineering-response model can "plug in" for analysis without having to change what's being plugged into.

The goal is also to enable the various SHA components to be geographically distributed over the internet in a "community modeling environment." These are tied together with a web interface. This infrastructure should significantly reduce the gap between cutting-edge geophysics and state-of-the-art hazard and risk evaluations. OpenSHA encourages participation from anyone in this development. We anticipate that OpenSHA will be easy to work with and have been engaged in dialog with Ned Field of the USGS about integration of QuakeSim components, such as Virtual California, with OpenSHA. We will also work to extend our Web Services environment into OpenSHA.

HAZUS-MH is currently a Windows-only system, but it does offer modular extension capabilities and integration with Microsoft Access and SQL Server data bases. There are different approaches to integrating new data and models into HAZUS-MH. Field et al. interfaced OpenSHA with HAZUS-MH by producing data that HAZUS-MH can accept. We will initially build Web Service connections to HAZUS-MH databases that will allow us to exchange data between our Open Geospatial Consortium compatible, Geography Markup Language (GML)-based GIS data services [Aktas, *et al.*, 2005a] and ArcGIS-compatible data formats used by HAZUS-MH. This will require some development work to create GML-ESRI converters for our specific data sets, but this is a common problem and we have a high likelihood of success since our team includes both GIS and HAZUS-MH developers. Besides the data exchange model described above, we will also evaluate developing HAZUS-MH modules to directly invoke SERVO codes. We will not directly integrate SERVO applications (which typically must be run on UNIX workstations, clusters, and supercomputers) with Windows-based HAZUS-MH. Instead, we will develop HAZUS modules (using its support for Java) that are lightweight Grid Web Service client stubs to the remote services. This is essentially the same approach that we use for the QuakeSim portal. The value of this integration is probably highest for rapidly running codes like Pattern Informatics, which run in a few seconds or minutes. GeoFEST and VC runs are much longer (several hours or more), so HAZUS-MH integration will need some investigation.

It is also feasible to reverse the process and use HAZUS-MH as a service for our portal client. All maps generated by HAZUS-MH can be exposed as an ArcIMS image or feature service. ESRI has two extensions to expose ArcIMS in OGC compatible Feature or Web map services. We have written a component to translate ArcIMS into Web map service for USGS. One other option is to use ArcGIS Server components to write a custom web map application to be compatible with OGC map services. Once exposed as map services, HAZUS-MH maps can be imported into the QuakeSim portal [Sayar, *et al.*, 2005].

In previous discussions with HAZUS users they expressed interest in a Grid to drive HAZUS. Each county in Indiana has to separately use it to satisfy federal law. By wrapping HAZUS as a Service and allowing it to accept distributed data (just transferred from distributed services or files), Indiana counties can then be supported by a few HAZUS experts and a central cluster to give needed compute power. HAZUS will be wrapped as a standalone simulation. We will produce filters that transform our features, simulations, and data into HAZUS input file, including those needed by its arcGIS ESRI engine.

Innovative Aspects

This process of integration, proposed here, has recently assumed significantly greater importance, due to the fact that the current Working Group on California Earthquake Probabilities has decided to incorporate results from QuakeSim products, specifically Virtual California simulations, into the next generation of earthquake probability calculations (Ned Field, personal communication, 2005). These probabilities are then used by the California Geological Survey and the California Earthquake Authority (CEA; http://www.earthquakeauthority.com) to set the earthquake insurance rates throughout the state of California, implying a large economic impact for QuakeSim products. According to the Governing Board Memorandum of February 24, 2005 [CEA, 2005], these insurance rates will be set in a cooperative process involving the USGS, SCEC, and the CGS. As a result, an important member of the proposed solutions network will be Dr. Ned Field, USGS, the chair of the WGCEP Executive Committee that is charged with carrying out the latest forecast probability calculations.

Grid Services

SERVOGrid is implemented as a collection of Web Services for accessing data sources, execution codes, and other tools. User interfaces to these services are implemented as portlets [Abdelnur, *et al.*, 2003], which are in turn aggregated into a central portal (Figure 2).

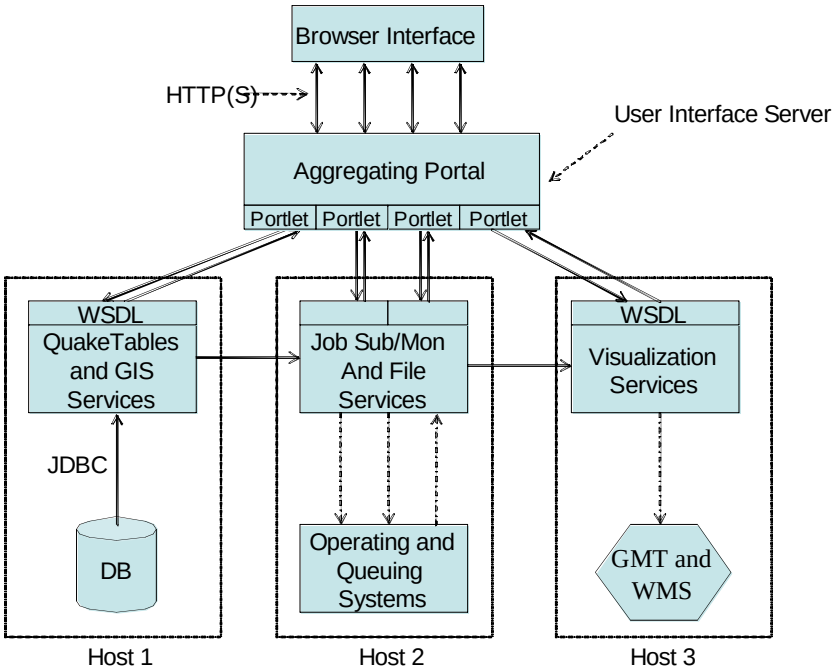

Figure 2. The SERVOGrid Architecture consists of distributed Web Services accessed through the QuakeSim user portal.

We chose the portlet approach for building our Web portal. This has the primary advantage of allowing us to plug in third-party portlets into our system. Thus it is not difficult to combine a user interface that combines portlets to our Web Service Grid

components as well as portlets to various Globus Toolkit services [Open Grids Computing Environment, 2005], collaboration tools, news and information services, and so forth. For example, we expect significant advances in integration of community collaboration tools developed by the Sakai [Sakai, 2005] project (calendars, message boards, Wikis, document managers) with portlet containers. It is this approach that makes our system ideally suited for extending to HAZUS-MH and OpenSHA.

Quake Tables Fault Database

Designing data services to provide data access to the SERVOGrid codes was as important as managing applications. The QuakeTables Web Service and Web accessible database [Chen, *et al.*, 2003; Grant, *et al.*, 2005] was our initial data service. QuakeTables acts as a data repository for earthquake fault data, including location, geometric and material characteristics, and provenance information such as the source (author, journal information, etc) for a particular fault entry. QuakeTables, as a Web Service, provides both a human usable Web interface and a WSDL-based programming interface. Using the latter, we have integrated QuakeTables with GeoFEST, Disloc, and Simplex through the QuakeSim portal. We will extend QuakeTables to our applications HAZUS-MH and OpenSHA so that faults in the database can be used for source earthquake, as well as for providing information for the Observing System Simulation Experiments for constructing derived and potential sources. We will also update QuakeTables with the latest relevant data about active faults as new information becomes available.

Geographical Information System Services

Geographical Information System (GIS) standards have been adapted to meet many our data and metadata requirements. The Open Geospatial Consortium (OGC; http://www.opengeospatial.org) defines an extensible (and extensive) XML data model, the Geographic Markup Language (GML) [Cox, *et al.*, 2003], for describing geospatial and geo-temporal features. This common data model is then integrated with a number of services. The OGC defines standard service definitions and interoperability guidelines.

We implemented the following "Information and Data Grid" Web Services:

- **Data Services:** We implemented the Web Feature Service [Vrertanos, 2002] to store and retrieve seismic data archives, GPS data archives, and faults. An OGC feature is a GML description of a map object.
- **Map Generation Services:** We implemented the OGC's Web Map Service specification [Beaujardierre, 2004] as a Web Service. The Web Map Service is used to generate vector and raster maps in various formats (SVG, JPEG, GIF, etc). These maps typically include realizations of abstract feature data obtained from Web Feature Services. Our Web Map Service can also integrate maps from other Web Map Servers as an overlay.
- **Information Services:** One useful feature of the OGC service specifications is that they include a standard XML metadata description ("capabilities") and query method. The OGC also defines information services (catalogs) for aggregating capability information. We decided, however, that these specifications were too GIS specific and could be substituted with more general, UDDI-based systems.

We developed an extension of UDDI along these lines to support general metadata extensions and XPath queries, with specific realizations for the OGC capabilities file. See [Aktas, *et al.*, 2005b] for more information.

Real Time Data Grids

We are now in the process of developing real-time streaming data grid applications. Our current research involves providing the infrastructure for coupling real-time GPS data, available from the Southern California Integrated GPS Network, with RDAHMM for real-time event detection. RDAHMM can be used to detect underlying mode changes in archived GPS signals. These modes, which require no fixed input parameters, can be associated with physical processes such as earthquakes and more subtle aseismic events. Incorporation of real-time data streaming into OpenSHA and HAZUS-MH will allow for much more rapid assessment and response following earthquakes. Perhaps in the long-term, pattern recognition techniques will make it possible to respond to potential earthquake, before they occur.

Pattern Recognition and Informatics

Pattern Informatics (PI) [Tiampo, *et al.*, 2002] calculates regions of enhanced probability for future large earthquakes based on the activity of small earthquakes in the region. PI uses seismic data archives that are available online. In principle, the method can also be enhanced by the use of NASA space geodetic products that measure surface deformation, including GPS and InSAR, work that we intend to pursue as a part of this proposal.

Regularized Deterministic Annealing Hidden Markov Model (RDAHMM) [Granat, *et al.*, 2002; Granat, 2004] is a time series analysis program based on Hidden Markov Modeling. Produces feature vectors and probabilities for transitioning from one class to another. RDAHMM is typically used to analyze GPS and seismic catalog archives, but can be adapted to detect state change events in real time.

Simulations

Virtual California is software that utilizes the Monte Carlo method in order to generate simulated, realistic earthquakes on an arbitrary fault surface mesh. It uses topologically realistic networks of independent fault segments that are mediated by elastic interactions. These segments can be designed to represent fault systems spanning the region of California or any region of interest. Virtual California is of particular importance because it can be used to study how earthquake faults interact, allowing calculations that define how future earthquakes arise from correlations with previous earthquakes in the region. Simulation experiments from Virtual California will serve as important inputs into decision support tools and models, similar to how weather forecasting is done today.

GeoFEST simulates stress evolution, fault slip and plastic/elastic processes in realistic materials. The products of such simulations are synthetic observable time-dependent surface deformation on scales from days to decades. Scientific applications of the code include the modeling of static and transient co- and postseismic Earth deformation. It is well suited for Observing System Simulation Experiments and was

developed for such purposes. Engineering and planning applications include assessment of lifeline vulnerability. Simulations can be run to model deformation that would be observed from InSAR satellites and GPS stations. Data from such systems can then be used to estimate potential earthquake sources, for use as input into HAZUS-MH and OpenSHA.

GeoFEST has been downloaded by more than 80 customers, including researchers from Stanford, MIT, Caltech, Harvard, USGS, Los Alamos National Laboratory, University of Texas, University of Illinois at Urbana-Champagne, MIT, West Virginia University, Murray State University, University of Memphis, Oregon State University, San Diego State University, USC, Michigan Tech University, Woods Hole Oceanographic Institution (WHOI), University of Miami, University of Colorado at Boulder, Columbia University, University of Arkansas, and the Rensselaer Polytechnic Institute. We will now integrate it into the network of end users responsible for making decisions regarding earthquake hazards and building code improvements.

Advantages over alternatives

QuakeSim is a truly distributed system, making it ideally suited for interfacing with networks of users. It was developed to study the physics of earthquakes using state-of-the-art modeling, data manipulation, and pattern recognition technologies. We have developed clearly defined accessible data formats and code protocols as inputs to the simulations. These codes have been adapted to high-performance computers because the solid earth system is so complex and nonlinear. These tools have now made it possible to construct the more complex models and simulations necessary for hazard assessment systems critical for reducing future losses from major earthquakes.

Rationale for extending results

The significance of the problem being addressed – enhancing the HAZUS-MH and OpenSHA capabilities for earthquake hazard assessment and loss estimation – is framed by economic impact analyses. Performance enhancement would enable improved land use planning in regions and zones prone to seismic risk, and would reduce uncertainty in loss estimates. Integrating QuakeSim into HAZUS-MH and OpenSHA has a potentially large positive impact on decision making.

Olshansky and Wu [2001] performed an earthquake risk analysis for Los Angeles County using available land-use maps, a probabilistic earthquake hazard model developed by SCEC, and the HAZUS-MH earthquake loss estimation software. They computed the annual expected loss owing to earthquakes and the spatial variation of this risk. The analysis shows that the annual long-term earthquake risk in Los Angeles County, as a result of direct structural and nonstructural damage, is $388 million per year. Olshansky and Wu [2001)] also investigated the extent to which planned future land-use growth would affect this risk estimate, and found that planned growth of 14.2% would result in an increase in annual risk to $449.5 million, a 15.8% increase over the risk to current land uses.

Field et al. [2005] present loss estimates for an earthquake rupture on the recently identified Puente Hills blind-thrust fault beneath Los Angeles, based on OpenSHA and

HAZUS-MH. Rupture on this fault is a rare event, once every 3000 years. Given a range of possible magnitudes and ground motion models, and presuming a full fault rupture, they estimate the total economic loss to be between $82 and $252 billion. This range is not only considerably higher than a previous estimate of $69 billion, but also implies the event would be the costliest disaster in U.S. history. The analysis has also provided the following predictions: 3,000-18,000 fatalities, 142,000-735,000 displaced households, 42,000-211,000 in need of short-term public shelter, and 30,000-99,000 tons of debris generated. *Field et al. [2005] show that the choice of ground motion model can be more influential than the earthquake magnitude, and that reducing this epistemic uncertainty (e.g., via model improvement and/or rejection) could reduce the uncertainty of the loss estimates by up to a factor of two*.

Our approach is innovative in that it takes into account new datasets that provide information on strain, and thus derived stress environment, in earthquake prone regions. This will lead to improved source models for earthquakes. Our approach is novel in that it uses web services and federated datasources to seamlessly integrate the models into with the existing hazard assessment and decision support tools. Through this work, we will develop a solutions network of modelers and users in the early formulation stages of a new InSAR mission, which should improve the utility and impact of such a mission.

Use of Systems Engineering Approach

In this project, we will make use of system management tools and strategies that we have found successful in previous projects involving distributed development teams. In this section, we discuss our approaches to engineering team communication, software management (repositories and versioning), building and testing software, testbed facilities, and user support.

Engineering Management

Project development involving team members at several locations is a difficult task that demands careful planning and management. Our team has been collaborating since 2002, and we have during this time established protocols for interaction that insure development milestones are met or else contingency plans are developed. We will continue these in the current proposed project.

- Weekly group teleconferences: these will be used to review progress on milestones and discuss technical problems.
- Quarterly team system alpha testing: we will have quarterly system testing sessions (1–2 days each) via Polycom and other collaboration tools. These will be used to stress test various project milestones that are sufficiently robust and integrated into the project.
- Biannual integration retreats: these will be 1–2 day retreats that involve developers from several institutions and will be used to provide dedicated integration time for various sub-components.
- All Hands Meetings: we will have 1–2 face-to-face meetings that will involve team members from all participating institutions.

We also have learned the value of intensive internships and exchange programs that place graduate student developers under the guidance of senior team members at other institutions. We will actively participate in these programs so that graduate students from the university team members can work directly with JPL team members.

Software Repositories and Version Control

A commonly accessible code repository with version control is a requirement for this project. We will follow Apache Software Foundation model by using Concurrent Versions System (CVS) software, with various team members given "committer" status that will enable them to write changes to the common repository. Sufficiently matured source code will be provided via anonymous CVS access. We will make use of numerous CVS capabilities, including watch lists and Web accessible repository views. Indiana University will initially host the code repository. The Community Grids Laboratory has sufficient computing resources and network access for this task, as described in the facilities statement.

CVS is a very stable and popular system, but it is gradually being replaced by its follow-on SVN ("subversion"). We anticipate a transition from CVS to SVN near the end of project year 2, as we gain experience with it. SVN supplies tools for importing legacy CVS repositories.

Building, Unit Testing, and Documentation

In addition to code repositories, we must provide an integrated build and test system for all system code. A significant portion of our project (Web Services to support codes, portlet plugins for Web portals, etc) are Java-based, so we will use best-practice, open source tools for building and testing. We have used Apache Maven for this in various other projects and will continue this practice here. Maven provides both local and remote Java jar version management and a large library of useful build tools for managing Java-based projects, including compilation; jar and war file creation; and javadoc documentation generation. Maven (through xdoc support) also supports simple HTML-based system documentation and project Web site creation. Most Apache project websites are generated this way. Maven integrates easily with Apache Ant, which can be used to support non-Java compilations.

Unit testing is a well-established way for validating individual components in a complicated system. For portal-based systems, we have found HttpUnit (an extension of JUnit) to be particularly useful for validating the QuakeSim portal. For this project, we will develop a HttpUnit and Junit testing matrix to validate both compilations and live deployments. HttpUnit can be integrated with both Ant and Maven to produce HTML dashboards of test results.

System testing also involves testbed deployment. We will build upon our QuakeSim portal testbed for this.

Software User Testing Support and Bug Reporting

As described above, we will schedule quarterly internal "alpha" testing throughout the project. As the software matures, we will incorporate more "beta" testing through

external users. Both testing scenarios will inevitably uncover software bugs, requests for new features, requests for modifications to user interfaces, and so forth. We will manage all of these through Mozilla's Bugzilla software. Indiana University maintains a Bugzilla for several projects, including QuakeSim, which we actively use to report problems and track progress. We will continue to use this system in the current project.

For general communications, we will use commonly available mailing list software (such as LISTSERV). We will set up both internal (developer) and external lists.

Management Approach

Our solutions network consists of an internal team that will interface QuakeSim and extend SERVO to the user community. At a minimum, the user community consists of HAZUS-MH trainers from the State of Indiana (Kevin Mickey), OpenSHA developers from the USGS (Ned Field), and the California State Geologist's Office (Michael Reichle and John Parrish). It is expected that these key users will help us develop a targeted network of end users as the project matures.

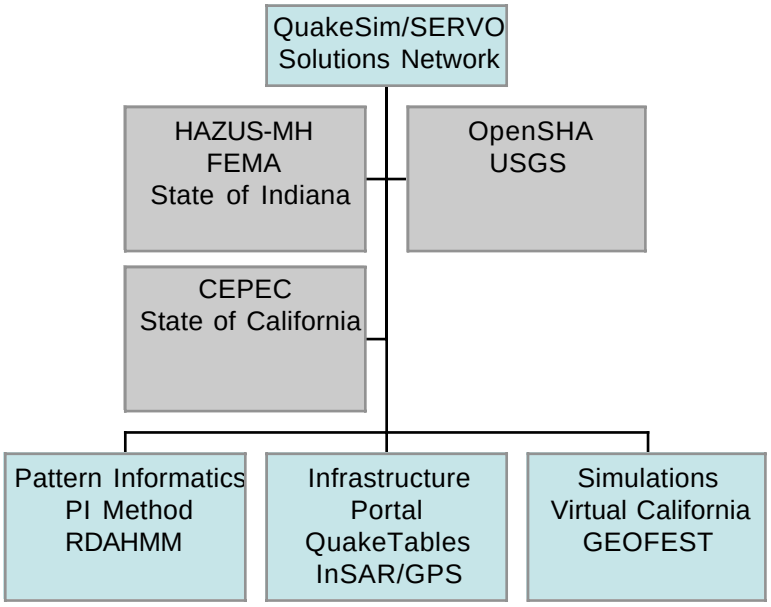

Figure 3. Organizational chart showing this project with HAZUS-MH, OpenSHA, and the California Earthquake Prediction Evaluation Council (CEPEC) in user/advisory roles. Components of the project include pattern informatics, the infrastructure including data sources, and the Observational System Simulation Experiment components.

Plan of work, management structure, partnership arrangements, expected contribution, roles and responsibilities of team members

Issues and Risks Affecting Project Success

We summarize the primary risks of this project in the table below, along with strategies for mitigating risks.

Risk Category	Risks and Issues	Mitigation Approach
Technical Risks	HAZUS-MH integration will be more difficult than planned.	We have included HAZUS experts on the project team, who will be responsible for technical support.
	QuakeSim/SERVO is based on stable but aging Web Service standards. Eventual upgrades to support new Web Service standards (WSDL 2.0 and SOAP 1.2) may be more difficult than planned.	Indiana University maintains close connections with the Apache Axis 2 development team and has a graduate student on-site that is a committer to this project.
	Distributed code bases and developers will lead to integration problems.	We address these issues in the System Engineering section.
Policy Risks	HAZUS-MH extensions require FEMA approval before they can be used by local emergency planners. The software developed in this project must be suitable for this next step.	HAZUS development in this project is primarily a proof of concept, but several team members have experience with FEMA and local emergency planners, so software will be developed with long term adoption in mind.
	Web and Grid Services must meet local site policies (particularly at NASA sites) before they can be installed.	Significant installations of Grid and Web Service software such as the NSF TeraGrid are generating substantial best-practice documentation on these issues. We will adapt these strategies to the current project sites.
Operations Risks	The distributed deployment environment must be secure, highly reliable, and robust.	Redundancy is the primary mechanism for mitigating network, hardware, and server failures. We will maintain redundant installations of all services at several locations. We will take advantage of local network monitoring and back up systems at each deployment site.
Management Risks	The project, because it involves many distributed participants, needs close supervision to meet milestones.	The project team has worked together since 2002 and has established procedures to insure frequent formal communication and collaboration. This is discussed in the Systems Engineering and Project Management sections.
	The project will need to balance technical milestones with user priorities.	We will actively work to recruit a technical user base through our connections with various collaborators.

Transition Approach/Activities

Our activities and transition of NASA technology and data will take place in stages over the course of the three years. Meetings will take place between individual users and developers, within the QuakeSim team, and in workshops of the entire group.

Year 1: Establish and Develop Working Relationships with Users

While we have partners for immediate infusion and testing of our system, we will need to expand our Solutions Network to include more end-users. During the first year we will forge our partnerships by determining the needs of the end users for their decision support tools as well as familiarize them with the existing QuakeSim tools. We will also develop a method for updating data services such as QuakeTables throughout the project as relevant new fault data becomes available.

We will work with the HAZUS-MH users/trainers in Indiana to interface QuakeSim/SERVO with that decision support tool. Ultimately we will need to work directly with the developers of HAZUS-MH, so we will initiate a series of meetings to develop working relationships with them. We will also expand our interfaces with potential users within the US Geological Survey, beyond Ned Field, the developer of OpenSHA. Our first year of work with the State of California Geological Survey will require a series of meetings to establish methods for evaluating and validating the Pattern Informatics and Virtual California software.

We will also open dialogue with other end users including the California Office of Emergency Services, California counties (example: Orange County Emergency Management Agency), California Seismic Safety Commission, and the California Earthquake Authority. The geographical distribution of our team will make it easier to have frequent interactions with these different groups.

Year 2: Interface Tools and Data with HAZUS-MH and OpenSHA

Following our first year of developing working relationships and establishing requirements our primary effort will be in improving our software through testing and validation by the users and developers. We will continue to expand our Solutions Network through meetings and individual discussions. During this time we will also need to work with the GPS and InSAR community to most effectively infuse those data into the Decision Support Tools.

Year 3: Validate Tools and Methodology

During our third year we will assure that our prototype network is of utility to disaster management for earthquakes and the associated users. By the third year the system should be streamlined enough to engage a broader community in workshops and training exercises. In parallel we will validate the methodology and assess its effectiveness through statistical analysis and testing. We will run simulations to evaluate the utility of surface deformation data (InSAR and GPS) for improved hazard assessment before earthquakes and damage assessment following earthquakes.

Performance Measures

Measures of success of this project will be both qualitative and quantitative. They include uses of the system, accuracy of the forecasting methodology, and impact of the NASA data on the decision support tools.

Value and Performance of the Network

We will measure the value of the network by the number of users who adopt the system as well as the frequency with which they use it. We will assess the quality of the interactions between the QuakeSim team and end users and make improvements as necessary. We will track and record the users and will monitor the usage with time.

It will be particularly important to assess the success of the forecasting methodology. This will be done through statistical analysis, in both retroactive forecasts and from future earthquakes using current forecasts. We will assess the value of the surface deformation to improving forecasts for location and time as well as accuracy of estimating future zones of rupture. As mentioned earlier, an accurate understanding of an earthquake rupture zone greatly improves understanding of potential damage from future earthquakes as well as existing damage from earthquakes that have occurred.

We will also measure the amount of activity taking place through use of the portal as well as access to data and software modules. We expect to see the portal activity increase with time, and at the same time see a decrease in the number of bug reports as time progresses.

Management Metrics

We will monitor the project for schedule and cost. JPL has standard tools for monitoring cost. We will plan our expenditures and will monitor them against actual expenditures on a monthly basis. We will track our milestones as outlined in the schedule part of this proposal to determine that we are on schedule and are meeting our milestones.

Anticipated Results/Improvements

Recent and current NASA-sponsored earth observing systems and simulations are now enabling new kinds of forecasts and hazard assessments for earthquakes. These include space geodetic systems such as dense GPS networks and future InSAR missions. The last five years have shown unprecedented growth in the amount and quality of space geodetic data collected to characterize geodynamical crustal deformation in earthquake prone areas. NASA-developed simulations and tools use these data to produce dynamic strain maps and estimate stress field changes that indicate local earthquake risk. A complementary approach uses pattern informatics forecasts of earthquake hotspots. Neither of these methods are used in the current Decision Support Tools, which start with estimates of earthquake sources (i.e. faults). The data and methods will greatly improve estimates of potential earthquakes including their source characteristics. We will refine these methods using QuakeSim/SERVO's Web Services, ontology-supported approach to integrate such tools into the existing decision support tools HAZUS-MH and OpenSHA. The resulting system will deliver a rich environment of tools and data to disaster management decision makers, which will be designed to render practical assistance for setting priorities such as retrofitting highways and buildings, placement of emergency supplies, and training of local first-responders.

We project major advances in the understanding of complex systems from the expected increase in data. Development of this system will ready the Decision Support user community for the expected data deluge from a future InSAR mission and will provide an immediate application for the data. The value of the InSAR data will be increased as it is fused with data from other sources.

Multiscale integration for Earth science requires the linkage of data grids [Foster and Kesselman, 2004; Berman, *et al.*, 2003; Rajasekar, *et al.*, 2003] and high performance computing. Data grids must manage data sets that are either too large to be stored in a single location or else are geographically distributed by their nature (such as data generated by distributed sensors). SERVO supports loosely and closely coupled styles of computing. The modeler is allowed to specify the linkage of descriptions across scales as well as the criterion to be used to decide at which level to represent the system. The goal is to support a multitude of distributed data sources, ranging over federated database, sensor, satellite data and simulation data, all of which may be stored at various locations with various technologies in various formats.

The outcome of this project is to couple data and modeling results with decision support tools HAZUS-MH and OpenSHA. With better earthquake forecasting ability enabled by further development of simulation tools and data integration, decision makers will have a better understanding of where earthquake risks are the highest and can work to develop a disaster management program based on these likelihoods. Additionally, there is on-demand science capability inherent in this system, which can facilitate decision-making immediately following a disaster. The QuakeSim and SERVO tools can be used to forecast where aftershocks might occur, how stress is transferred between interacting faults, and on what fault plane the event occurred. QuakeSim tools can also provide estimates of ground deformation, which are critical for rapid damage assessment of lifelines and infrastructure.

Schedule

Year 1: Establish and Develop Working Relationships with Users	
Year 2: Interface Tools and Data with HAZUS-MH and OpenSHA	
Year 3: Validate Tools and Methodology	
Recurring Tasks	
Management	
Track cost and schedule	Monthly
All hands meetings	October 2006, 2007, 2008
Annual Reports	March 2007, 2008, 2009
Users	
Feedback from users	As needed
Expand User Group	October 2006 - March 2009
Meet with potential new users	Ongoing
Infrastructure	
System testing	Quarterly
Integration meetings	Biannual
Correct existing bugs	Ongoing
Task Detail	
Users	
Portal tutorials to users	March 2006 - October 2006
Determine user needs and requirements	February 2007
User testing and validation	March 2008
Routine use of system	March 2009
Infrastructure	
Refine existing system	March 2007
Integrate QuakeSim with OpenSHA	October 2007
Wrap HAZUS-MH to accept distributed data	March 2008
Preliminary infusion of GPS and InSAR data	October 2008
Final system delivery	March 2009
Forecasting/Simulations	
Computation of conditional probabilities and waiting times to future events using improved Virtual California and GeoFEST simulations, integrating new field data into models. Evaluation compared to existing methods.	December 2006
Statistical analysis of retroactive forecasts. Improvement of models using data assimilation methods.	August 2007
Benchmark forecasts against large earthquakes occurring after time of forecast (if any). Improvement of forecasts using "data-scoring" approach. Integrate results into WGCEP and CEA requirements.	March 2008, 2009

Statements of Commitment

UNIVERSITY OF CALIFORNIA, DAVIS

BERKELEY • DAVIS • IRVINE • LOS ANGELES • RIVERSIDE • SAN DIEGO • SAN FRANCISCO — SANTA BARBARA • SANTA CRUZ

Office of Research
Sponsored Programs – 118 Everson Hall
Davis, California 95616.8671

Telephone: 530.754.7667
Facsimile: 530.752.5432
E-Mail: mannguyen@ucdavis.edu

30 November 2005

Andrea Donnellan
Earth and Space Science Division
Jet Propulsion Laboratory
California Institute of Technology
4800 Oak Grove Drive
Pasadena, CA 91109-8099

In Support of Research Project Entitled
"Integrating QuakeSim and InSAR into the HAZUS-MH Disaster Management Earthquake Module"
UCD PI – John B. Rundle

Dear Dr. Donnellan,

It is our pleasure to forward institutional support for UCD's Dr. Rundle in the referenced research proposal that is being submitted to your institution. The proposal is requesting funding in the amount of $225,000 for the time period April 3, 2006 through April 2, 2009.

If this proposal is favorably reviewed, please contact this office should any questions arise when generating the award documentation for The Regents of the University of California.

Please contact me by telephone, facsimile, or electronic mail if there are any administrative or award-related questions.

Sincerely,

Matt Nguyen,
Contracts and Grants Analyst

Enclosures

cc. **J. Rundle**

Andrea Donnellan, Ph.D.
Mail Stop 183-335
Jet Propulsion Laboratory
4800 Oak Grove Drive
Pasadena, CA 91109-8099

pervasivetechnologylabs
AT INDIANA UNIVERSITY

November 30, 2005

Dear Dr. Donnellan:

Indiana University is pleased to submit the proposal "Integrating QuakeSim and InSAR into HAZUS-MH and OpenSHA Disaster Management for Earthquakes" on behalf of Dr. Geoffrey Fox. This proposal is for inclusion in your grant application to NASA and has been administratively approved by the appropriate University officials. Support is requested for a 36 month period and is in the total amount of $224,905.

The Community Grids Laboratory has lead the Web Service infrastructure and Web portal development for the QuakeSim an SERVOGrid projects. They are pleased to continue to support the proposed collaboration and will provide support for integrating the core QuakeSim capabilities with HAZUS-MH and OpenSHA.

The Polis Center provides expertise in both Geographical Information Systems and HAZUS-MH software training, development, and usage. Polis team members will assist with the technical integration of QuakeSim services with HAZUS-MH and will also assist with outreach to potential user communities.

If this proposal is successful, the University will ensure compliance with all pertinent federal regulations and policies. The subcontract agreement should be between your institution and the Trustees of Indiana University. Administrative questions regarding the proposal should be directed to:

Theresa A. Miller, Director of Proposal Review
Sponsored Research Services, Indiana University
P.O. Box 1847; Bloomington, IN 47402-1847
Phone: (812)855-0516 Fax: (812)855-9943 Email: teremill@indiana.edu

Questions regarding the technical aspects of this proposal should be directed to:

Geoffrey C. Fox, Director Community Grids Laboratory
Pervasive Technology Labs at Indiana University
501 N. Morton St., Ste 224; Bloomington, IN 47404-3730
Phone: (812)856-7977 Fax: (812)856-1537 Email: gcf@indiana.edu

Sincerely,

Geoffrey C. Fox

Principle Investigator & Project Director:
Geoffrey C. Fox
Director, Community Grids Laboratory

Michael A. McRobbie 12/1/05

Authorizing Official for the University:
Michael A. McRobbie
Vice President for Research

501 North Morton Street, Suite 224
Bloomington, Indiana 47404-3730
812-856-1242 Fax 812-856-1537

UNIVERSITY OF CALIFORNIA, IRVINE

BERKELEY · DAVIS · IRVINE · LOS ANGELES · MERCED · RIVERSIDE · SAN DIEGO · SAN FRANCISCO

SANTA BARBARA · SANTA CRUZ

OFFICE OF RESEARCH ADMINISTRATION

300 University Tower
Irvine, CA 92697-2600
(949) 824-4768
Fax (949) 824-2094
http://www.ors.uci.edu/

Express Mail:
4199 Campus Dr
Suite 200, University Tower
Irvine, CA 92612

December 1, 2005

Dr. Andrea Donnellan
Mail Stop 183-335
Jet Propulsion Laboratory
4800 Oak Grove Drive
Pasadena, CA 91109-8099

RE: UCI Proposal Number 39221

On behalf of The Regents of the University of California, we are presenting for your review a request for support of the following proposal:

Principal Investigator:	Dr. Lisa Grant School of Social Ecology
Title:	"Integrating QuakeSim and InSAR into HAZUS-MH and Open SHA Disaster Management for Earthquakes"
Support Requested:	590,000.00
Period of Support:	April 3, 2006 through April 2, 2009
Type of Request:	New Research Subcontract

The Regents of the University of California accepts CRIT R 12/04, JPL's "General Provisions Cost-Reimbursement Without Fee with an Educational Institution Subcontract," with approved alterations.

The University of California has annual audits performed in accordance with the requirements of OMB Circular A-133. A copy of the most recent report is enclosed herewith.

Finally, please find a copy of the University's indirect cost rate agreement with DHHS enclosed herewith.

Your favorable consideration will be greatly appreciated. If additional information is required, please contact the undersigned at (949) 824-9015.

Sincerely,

Cynthia J. Wells
Contracts Officer

Enclosures: as referenced

cc w/o encl.: Dr. Lisa Grant
Abby Khachadoorian
Beverly Warren

USC
UNIVERSITY
OF SOUTHERN
CALIFORNIA

Department of
Contracts and Grants

December 1, 2005

Jet Propulsion Laboratory

Attention : Dr. Andrea Donnellan

SUBJECT: Proposal entitled "Integrating QuakeSim and InSAR into HAZUS-MH and OpenSHA Disaster Management for Earthquakes"

USC PI:	P. Dennis McLeod
Total funds requested:	$225,000
Period of Performance:	7/01/06 – 06/30/09
No. of copies:	Electronic Submission via email

We are pleased to forward the subject document for your review and consideration. This proposal has been approved by the University. Should an award be made, acceptance will be based on mutually-agreeable terms.

Should you have any questions or require further information that is administrative in nature, please contact me at the address provided below. Please address all technical inquiries to our Principal Investigator.

Sincerely,

Vanessa M. Nichols
Contract and Grant Administrator

CC: PI(s)/file

University of
Southern California
Los Angeles,
California 90089-1147
Tel: 213 740 7762
Fax: 213 740 6070
web page:
www.usc.edu/dept/
contracts/

USC

UNIVERSITY OF SOUTHERN CALIFORNIA

Proposal Entitled:

Integrating QuakeSim and InSAR into HAZUS-MH and OpenSHA Disaster Management for Earthquakes

Submitted to:

JPL

Submitted by:

Dennis McLeod
Integrated Media System Center
University of Southern California
Los Angeles, CA 90089
(213) 740-0877
Fax: (213) 740-8931
Email: uneumann@usc.edu

Business Address:

Department of Contracts & Grants
ATTN: Vanessa Nichols
University of Southern California
University Park
Los Angeles, CA 90089-1147
(213) 740-6058
FAX: (213) 740-6070
Email: creus@usc.edu

December 1, 2005

Approved for the University:

Senior Contract and Grant Administrator

United States Department of the Interior

U.S. GEOLOGICAL SURVEY

Dr. Andrea Donnellan
Earth and Space Science Division
Jet Propulsion Laboratory, Caltech
4800 Oak Grove Drive
Pasadena, CA 91109-8099

Dec. 1, 2005

Dear Dr. Donnellan,

As Chair of the Executive Committee of the interagency Working Group on California Earthquake Probabilities (WGCEP), I would like to express my strong interest and support for the research described in your proposal *Integrating QuakeSim and InSAR into HAZUS-MH and OpenSHA Disaster Management for Earthquakes*.

The WGCEP is a joint activity of the US Geological Survey, the Southern California Earthquake Center (SCEC), and the California Geological Survey. We answer to a Management Oversight Committee, which is composed of a representative from each participating organization and is chaired by Thomas Jordan (SCEC director). Our near-term goal is to provide a time-dependent earthquake forecast to the California Earthquake Authority, the agency responsible for providing earthquake insurance throughout California.

Previous WGCEPs have relied on statistical renewal models, combined with observational data on fault segmentation and other data to define earthquake probabilities. In the future however, the WGCEP hopes to adopt new procedures based on numerical simulations of the system-level physics of interacting earthquake faults in California, similar in philosophy to weather and climate forecasts. The *Virtual California* simulation, which has been under development as a part of the NASA QuakeSim team effort, is one of the leading contenders for this advanced type of modeling. Therefore, I would like to closely follow the efforts of your team and make use of the results where appropriate in the WGCEP forecasts. I would also like to emphasize that the products from your team's research may play an important role in setting earthquake insurance rates throughout California, with potentially great economic impacts.

I sincerely appreciate the opportunity to cooperate with the QuakeSim team on setting research goals and priorities, and evaluating progress as the work progresses. I further anticipate that a joint collaboration will be beneficial to both groups, and I look forward to working with you on this important project.

Sincerely yours,

Edward (Ned) Field
US Geological Survey
Chair, Executive Committee, WGCEP
Pasadena, CA

Date: Wed, 23 Nov 2005 19:42:38 -0800
From: "Reichle, Michael" <Michael.Reichle@conservation.ca.gov>
Subject: RE: JPL/NASA Proposal rev.2
To: John Rundle <rundle@cse.ucdavis.edu>
Cc: Andrea Donnellan <andrea.donnellan@jpl.nasa.gov>,
"Parrish, John" <John.Parrish@conservation.ca.gov>
Thread-topic: JPL/NASA Proposal rev.2
Thread-index: AcXu8L6qnrguRBJnQx2wUAeJKbeJjgBt1vZS
X-imss-version: 2.034
X-imss-result: Passed
X-imss-scores: Clean:99.90000 C:2 M:3 S:5 R:5
X-imss-settings: Baseline:2 C:1 M:1 S:1 R:1 (0.1500 0.1500)
X-JPL-spam-score: 0.00%
Original-recipient: rfc822;andrea@mail.jpl.nasa.gov

John and Andrea,

After a long conversation with John Parrish today we have decided to decline your invitation to participate in the NASA proposal. That is, we feel we have to decline formal participation as PIs. This is because one of the principal roles of CGS is in the review and application of research results to public policy, as with CEPEC. Formal participation in that kind of research project could be viewed as a conflict of interest. I think that Ned and USGS would be a great partner for the project. On the other hand, we are very interested in the project and would like to follow it closely. I hope that we can discuss how CGS might have an advisory or informal presence in the project. Perhaps we can discuss that after I return to California next week. Or, perhaps at the meeting the following week.

Regards,

Mike

Budget Details/Cost Plan

Most of the costs incurred in this work are for salaries of personnel. Andrea Donnellan is the PI and will be in charge of overall management of the project. JPL personnel include PI, Andrea Donnellan, at 0.25 effort per year, 0.75 work years per year split between Margaret Glasscoe (documentation, interfacing with users, simulations and testing), Jay Parker (portal and GeoFEST), Gregory Lyzenga (GeoFEST), and Robert Granat (RDHAMM pattern informatics). Additional costs for JPL and each co-investigator include travel to AGU and other meetings, and publication in JGR or other comparable journal.

We have allocated nominal costs for our user/collaborators for travel to meetings. We do allocate salary for the HAZUS-MH trainers, located and Indiana University for their work on the project. Salaries are included for the PI, Geoffrey Fox at 5% FTE, Marlon Pierce at 20% FTE, Kevin Mickey at 10% FTE, and Neil Devadasan at 5% FTE. Travel is included in year one for the PI or senior personnel to attend project-related meetings with the other collaborators. The cost for one domestic trip is estimated at $1500. Other Direct Costs include $600 per year for the Polis Center in Miscellaneous Expenses. These will be comprised of $150 in copies and supplies and $450 in space rental.

The OpenSHA developers state that they are well-funded, and therefore requested no funds. The State of California geologists felt that their role would be better served without funds, as they need to be impartial reviewers of our work.

Each university will include graduate students in the project. The PIs will be responsible for their specific roles, as well as general administration of the project, and supervision of student researchers. Dr. John Rundle will be in charge of the simulations with Virtual California and the Pattern Informatics method. Drs. Geoffrey Fox and Marlon Pierce will carry the responsibilities for the portal interfaces. Dr. Dennis McLeod will oversee the federation of the data and of QuakeTables. Dr. Lisa Grant will be specifically responsible for the scientific direction of QuakeTables fault database integration with HAZUS-MH and OpenSHA.All salaries and wages were estimated using universities academic and staff salary scales and anticipated cost of living increases.

Year 1 Budget Summary

For Period From April 2006 to March 2007		NASA USE ONLY	
	A	B	C
1. Direct Labor	$161.2		
2. Other Direct Costs:			
a. Subcontracts	$274.1		
b. Consultants	$0.0		
c. Equipment	$0.0		
d. Supplies	$0.0		
e. Travel	$3.8		
f. Other			
1. MPS & ADC	$80.2		
2. Services	$0.5		
3. Facilities and Administrative Costs	$48.6		
4. Other Applicable Costs			
1. Award Fee	$7.4		
2. Government Co-I	$0.0		
5. **SUBTOTAL--Estimated Costs**	$575.8		
6. Less Proposed Cost Sharing (if any)			
7. Carryover Funds (if any)			
a. Anticipated amount :			
b. Amount used to reduce budget			
8. **Total Estimated Costs**	$575.8		XXXXXXX
9. **APPROVED BUDGET**	XXXXXXX	XXXXXXX	

Year 2 Budget Summary

For Period From April 2007 to March 2008		NASA USE ONLY	
	A	B	C
1. Direct Labor	$175.9		
2. Other Direct Costs:			
a. Subcontracts	$274.7		
b. Consultants	$0.0		
c. Equipment	$0.0		
d. Supplies	$0.0		
e. Travel	$7.5		
f. Other			
1. MPS & ADC	$85.4		
2. Services	$1.0		
3. Facilities and Administrative Costs	$48.9		
4. Other Applicable Costs			
1. Award Fee	$7.7		
2. Government Co-I			
5. SUBTOTAL--Estimated Costs	$601.1		
6. Less Proposed Cost Sharing (if any)			
7. Carryover Funds (if any)			
a. Anticipated amount :			
b. Amount used to reduce budget			
8. Total Estimated Costs	$601.1		XXXXXXX
9. APPROVED BUDGET	XXXXXXX	XXXXXXX	

Year 3 Budget Summary

For Period From April 2008 to March 2009		NASA USE ONLY	
	A	B	C
1. Direct Labor	$180.1		
2. Other Direct Costs:			
a. Subcontracts	$274.9		
b. Consultants	$0.0		
c. Equipment	$0.0		
d. Supplies	$0.0		
e. Travel	$11.3		
f. Other			
1. MPS & ADC	$85.9		
2. Services	$1.5		
3. Facilities and Administrative Costs	$49.1		
4. Other Applicable Costs			
1. Award Fee	$7.8		
2. Government Co-I	$0.0		
5. **SUBTOTAL--Estimated Costs**	$610.5		
6. Less Proposed Cost Sharing (if any)			
7. Carryover Funds (if any)			
a. Anticipated amount :			
b. Amount used to reduce budget			
8. **Total Estimated Costs**	$610.5		XXXXXXX
9. **APPROVED BUDGET**	XXXXXXX	XXXXXXX	

Grand Total Budget Summary

For Period From April 2006 to March 2009	A	NASA USE ONLY B	C
1. Direct Labor	$517.2		
2. Other Direct Costs:			
a. Subcontracts	$823.7		
b. Consultants	$0.0		
c. Equipment	$0.0		
d. Supplies	$0.0		
e. Travel	$22.5		
f. Other			
1. MPS & ADC	$251.6		
2. Services	$3.0		
3. Facilities and Administrative Costs	$146.6		
4. Other Applicable Costs			
1. Award Fee	$22.9		
2. Government Co-I	$0.0		
5. SUBTOTAL--Estimated Costs	$1,787.5		
6. Less Proposed Cost Sharing (if any)	$0.0		
7. Carryover Funds (if any)			
a. Anticipated amount :	$0.0		
b. Amount used to reduce budget	$0.0		
8. Total Estimated Costs	$1,787.5		XXXXXXX
9. APPROVED BUDGET	XXXXXXX	XXXXXXX	

UC Davis Budget

Budget Worksheet - "Integrating QuakeSim and InSAR into the HAZUS-MH Disaster Management Earthquake Module"
Principal Investigator: John Rundle

		# of Personnel	4/3/06 Year 1	4/3/07 Year 2	4/3/08 Year 3	Cummulative Total
PI		1	12,024	10,021	10,522	32,567
(3wks in yr 1; 2.5 wks in yr 2 & 3)						
Postdoc (25% time)	12 mos	1	10,332	10,849	11,391	32,572
GSR ACAD.YR (25%)	9 mos	1	10,905	11,450	12,023	34,378
GSR Summer	3 mos	1	3,635	3,817	4,008	11,459
			14,540	15,267	16,030	45,837
Undergrad		1		-	-	-
Total Salaries			36,896	36,137	37,943	110,976
PI Benefits		17%	2,044	1,704	1,789	5,536
Postdoc Benefits		17%	1,756	1,844	1,936	5,537
GSR Aca ben		1.3%	142	149	156	447
GSR Summ. Ben		3%	109	115	120	344
Undergrad Ben		3%	-	-	-	-
Ben Total			4,051	3,811	4,002	11,864
Ben & Sal Total			**40,947**	**39,948**	**41,945**	**122,840**
Equip				**-**	**-**	**-**
Travel		**Domestic**	**2,644**	**3,000**	**898**	**6,542**
		Int'l			**-**	**-**
Other Direct cost						
Supplies				240		240
Publication Costs				-	-	-
Computer (ADPE) Svcs				-	-	-
Fee Remission			8,960	9,408	9,878	28,246
Total Other Direct Costs			**8,960**	**9,648**	**9,878**	**28,486**
Total Direct Cost			**52,551**	**52,596**	**52,722**	**157,868**
Equip			-	-	-	-
Fee Remission			8,960	9,408	9,878	28,246
TOTAL BASE			43,591	43,188	42,843	129,622
Rate			51.50%	51.5/52.0%	52.00%	
Total Indirect			22,449	22,404	22,278	67,132
Total Direct&Indir. Cost			**75,000**	**75,000**	**75,000**	**225,000**

Indiana University Budget

	Year One	Year Two	Year Three	TOTAL	NOTES
Salaries					
1a. Kevin Mickey @ $76,960/Year @ 10% Effort (POLIS)	7696	8004	8324	24024	4% Increase Per Year
1b Neil Devadasan @$70,000/Year 5% Effort (POLIS)	3500	3640	3786	10926	4% Increase Per Year
1c Geoffrey Fox @ $227,245/year 5% Effort (PTL)	11362	11816	12289	35468	4% Increase Per Year
1d. Marlon Pierce @ $74,740/year 20% effort (PTL)	14948	15546	16168	46662	4% Increase Per Year
Total Salaries	**$ 37,506**	**$ 39,006**	**$ 40,566**	**117079**	
Fringe Benefits					
Staff 1a @ 30.92% (POLIS)	2380	2475	2574	7428	
Staff 1b @ 30.92% (POLIS)	1082	1125	1171	3378	
Staff 1c@ 30.92% (PTL)	3513	3654	3800	10967	
Staff 1d@ 30.92% (PTL)	4622	4807	4999	14428	
Total Fringe Benefits	**$ 11,597**	**$ 12,061**	**$ 12,543**	**36201**	
Total Salaries and Fringe Benefits	**$ 49,103**	**$ 51,067**	**$ 53,110**	**153279**	
Travel Expenses					
Domestic Travel (PTL)	0	1500	0	1500	
International Travel					
Total Travel	**$ -**	**$ 1,500**	**$ -**	**1500**	
Other Direct Costs					
Misc. Expenses - Space Rental & Copy Supplies (POLIS)	600	600	600	1800	
Total Other Costs	**$ 600**	**$ 600**	**$ 600**	**1800**	
Total Direct Costs	**$ 49,703**	**$ 53,167**	**$ 53,710**	**156579**	
Indirect Costs POLIS @ 26% - Off Campus Rate	**$ 3,967**	**$ 4,119**	**$ 4,278**	**12365**	
Indirect Costs PTL @51.5% (51% in Year 3)	**$ 17,739**	**$ 19,221**	**$ 19,000**	**55961**	
Total Budget per year	**$ 71,409**	**$ 76,508**	**$ 76,988**	**224905**	

UC Irvine Budget

PI NAME:	Lisa Grant			
Agency:	JPL/NASA			
Proj Period:	4/3/06 - 4/2/09			
		Year One	**Year Two**	**Year Three**
PERSONNEL		4/3/06-4/2/07	4/3/07-4/2/08	4/3/08-4/2/09
Salaries				
1. PI, Grant, 1 mon SS		$ 6,813	$ 6,950	$ 7,443
2. TBN, Undergrad Assist 25%AY, 50% SS		$ 9,224	$ 9,812	$ 10,509
3.		$ -	$ -	$ -
4.		$ -	$ -	$ -
Sub-total Salaries		**$ 16,037**	**$ 16,762**	**$ 17,952**
Benefits				
1. PI, Grant, 12.7%		$ 865	$ 883	$ 945
2. TBN, Undergrad Assist 1.3%AY 3% SS		$ 209	$ 223	$ 239
3.		$ -	$ -	$ -
4.		$ -	$ -	$ -
		$ 1,074	$ 1,106	$ 1,184
Fees/Tuition		$ -	$ -	$ -
Sub-total Benefits (benefits+fees/tuition)				
Total Salary and Benefits		**$ 16,037**	**$ 16,762**	**$ 17,952**
TRAVEL				
AGU, SCEC, JPL		$ 2,600	$ 2,000	$ 1,700
Total Travel		**$ 2,600**	**$ 2,000**	**$ 1,700**
CONSULTANTS				
		$ -	$ -	$ -
Total Consultants		**$ -**	**$ -**	**$ -**
EQUIPMENT				
		$ -	$ -	$ -
Total Equipment		**$ -**	**$ -**	**$ -**
SUPPLIES				
Software and storage media		$ 1,035	$ 910	$ 21
Total Supplies		**$ 1,035**	**$ 910**	**$ 21**
SUB-CONTRACTORS				
None		$ -	$ -	$ -
Total Sub-contractors		**$ -**	**$ -**	**$ -**
OTHER				
1.		$ -	$ -	$ -
2.		$ -	$ -	$ -
3.		$ -	$ -	$ -
Total Other		**$ -**	**$ -**	**$ -**
TOTAL DIRECT COSTS		**$ 19,672**	**$ 19,672**	**$ 19,673**
F&A Cost Base		**$ 19,672**	**$ 19,672**	**$ 19,673**
F&A @ 52.5%		**$ 10,328**	**$ 10,328**	**$ 10,328**
TOTAL COSTS		**$ 30,000**	**$ 29,999**	**$ 30,001**
		Year 01	Year 02	Year 03
MTDC Base = Direct Costs		$ 19,672	$ 19,672	$ 19,673
less tuition		$ -	$ -	$ -
less equipment		$ -	$ -	$ -
less subcontracts		$ -	$ -	$ -
less leases		$ -	$ -	$ -
MTDC Base/F&A Cost base		$ 19,672	$ 19,672	$ 19,673

University of Southern California Budget

Cost Estimate: JPL
Title:Integrating QuakeSim and InSAR into HAZUS-MH and OpenSHA Disaster Management for Earthquakes
Principal Investigator: Dennis McLeod
Research Period: 07/01/06 - 06/31/09

	YEAR 1	YEAR 2	YEAR 3	TOTAL
SALARIES & WAGES				
Principal Investigator Dennis McLeod 100% effort, 1 summer months Base Salary 05-06: $134,391/9 months	14,932	15,530	16,151	46,613
1 Graduate Research Assistant III 33.3% effort, 9 acad. Months	11,886	12,361	12,856	37,102
33.3% effort, 3 summer months Base Salary 05-06: $34,320/9 months	3,886	4,041	4,203	12,130
TOTAL SALARIES & WAGES	30,704	31,932	33,209	95,845
FRINGE BENEFITS 32% of S&W less RAs, 12 months	4,778	4,969	5,168	14,916
Total Compensation	35,482	36,901	38,377	110,761
MATERIALS & SUPPLIES For various computer software experimentaion costs, books	3,946	2,383	1,258	7,587
TRAVEL One trip per year for one investigator to attend meetings.	3,000	3,000	2,500	8,500
TUITION REMISSION 5 units/year/RA @ $1,067/unit	5,843	6,076	6,319	18,238
TOTAL DIRECT COSTS	48,271	48,361	48,455	145,086
INDIRECT COSTS MTDC=Total Direct Costs less Tuition 63.0% of MTDC, 36 month	26,730	26,639	26,545	79,914
TOTAL COST TO AGENCY	75,000	75,000	75,000	225,000

Facilities and Equipment

Each of the facilities has a network of computers that will be used by this project. Standard computers are needed for the work at each of the institutions. The portal work will be carried out at Indiana University.

Indiana University's Community Grids Laboratory maintains a heterogeneous network computing environment consisting of Windows (2000 and XP), Linux, Sun Solaris workstations and servers, including 40 Pentium 4-based desktop class machines, 20 Linux/Solaris (dual-CPU) server class, and two 8-CPU 16 GB Sun v880 server class machines to support the lab.s development and research efforts. All full-time researchers have Pentium-3-based laptops. The laboratory's network consists of server, workstation, and mobile connectivity provided by 100Mbit/second Ethernet, and 11Mbit/second 802.11b wireless connections respectively, connected in turn to Indiana University's network backbone via a

Other computing resources available within the lab include networked high-speed duplex laser printers, CD-R recording, video conferencing tools including two Access Grid Systems along with 5 Polycom ViaVideo systems and secure central data storage. Other services (e-mail, massive near-line data storage, production backup services, dialup, and remote VPN services etc) are provided by the university and University Information Technology Services. Community Grids Laboratory works closely with IU.s information technology services (UITS) and the IU Computer Science department in developing and testing new technologies.

UC Irvine will carry out the fault research for the QuakeTables database. It is a major research institution with excellent research resources and facilities. Most of the geologic data integration work for this project will be done in Grant's Environmental Geology and GIS Laboratory. The lab currently has 3 dedicated, networked computers, 2 workstations, a laptop, color laser printers, large format poster printer, scanner and related computing equipment. The UCI campus and the School of Social Ecology has licenses for standard office software and GIS database software. Grant's Environmental Geology and GIS Laboratory also has specialized software and data sets for research on faults. Additional computer labs are readily accessible to students and faculty. These include computer labs in the School of Social Ecology, and the campus office of Network And Computing Support (NACS).

JPL has access to a Dell Cluster supercomputer at JPL as well as supercomputing facilities at Caltech and NASA Ames. USC has a cluster of computers that will be used for work on the QuakeTables database.

Curriculum Vitae

ANDREA DONNELLAN

Education

Ph.D., Geophysics, California Institute of Technology (1991)
M.S., Computer Science, University of Southern California (2003)
M.S., Geophysics, California Institute of Technology (1988)
B.S., Geology, Ohio State University, *with honors and distinction in geology* (1986)

Professional Experience

Jet Propulsion Laboratory (1993 – present)
Deputy Manager, Science Division (2002–present)
Deputy Manager, Exploration Systems Autonomy Section (2000-2002)
Supervisor, Data Understanding Systems Group, (1999–2001)
Research Scientist, Satellite Geodesy and Geodynamics Systems Group (1997–1999)
Research Professor, Department of Earth Sciences, University of Southern California (1999–present)
Visiting Associate, Seismological Laboratory, California Institute of Technology, (1995–1996)
National Research Council Resident Research Associate, NASA Goddard Space Flight Center (1991–1993)

Professional Activities

InSAR Study Scientist (2005–)
Participant in NASA Earth Surface and Interior strategic planning.
QuakeFinder advisory board (2004 – present)
US Rep. to the International Sci. Board, APEC Cooperation on Earthquake Simulations (2000–present)
American Geophysical Union (AGU) nonlinear geophysics committee (2000–present)
Solid Earth Science Working Group for NASA HQ (2000–2002)
Acting Deputy Director, JPL Center for Life Detection (2002–2003)
Solid Earth science chair for NASA workshop on computational technologies needs (2002)
JPL Business Management Council (2002–2004)
JPL Science and Technology Management Council (2001–2004)
Plate Boundary Observatory steering committee (1999–2002)

Awards

NASA Space Act awards for GeoFESTv.4.3 (2004), QuakeSim, Simplex, and Disloc (2005)
Women at Work Medal of Excellence (2004)
Women in Aerospace Award for Outstanding Achievement (2003)
JPL Lew Allen Award for Excellence (2000)
Southern California Earthquake Center Outreach Award for Education (1998)
Presidential Early Career Award for Scientists and Engineers (1996)
National Research Council Postdoctoral Fellowship (1991–1993)

Select Recent Publications

Donnellan, A., J. Rundle, G. Fox, D. McLeod, L. Grant, T. Tullis, M. Pierce, J. Parker, G. Lyzenga, R. Granat, M. Glasscoe, QuakeSim and the Solid Earth Research Virtual Observatory, *PAGEOPH*, in press.

Grant L.B., **A. Donnellan**, D. McLeod, M. Pierce, G.C. Fox, A.Y. Chen, M.M. Gould[1], S.S. Sung, P.B. Rundle, A Web-Service Based Universal Approach to Heterogeneous Fault Databases, *Computing in Science and Engineering Special Issue on Multi-Physics Modeling*, 51–57, July/August 2005.

Rundle, J.B., P.B. Rundle, **A. Donnellan**, D.L. Turcotte, R. Shcherbakov, P. Li, B.D. Malamud, L. Grant, G. Fox, D. McLeod, G. Morein, J. Parker, W. Klein, A Simulation-based approach to forecasting the next great San Francisco earthquake, *Proceedings of the National Academy of Sciences*, 2005.

Donnellan, A., P. Mora, M. Matsu'ura, X-C. Yin, eds. Computational Earthquake Science, Parts I and II, PAGEOPH, 161, 2004.

Solomon, S. C., V. Baker, J. Bloxham, J. Booth, **A. Donnellan**, C. Elachi, D. Evans, E. Rignot, D. Burbank, B. Chao, A. Chave, A. Gillespie, T. Herring, R. Jeanloz, J. LaBrecque, B. Minster, W. C. Pitman, M. Simons, D. L. Turcotte, M. L. C. Zoback, (2003) "A Plan for Living on a Restless Planet," EOS Transactions of the American Geophysical Union, **84**, 485, 2003.

Donnellan, A., and B. Luyendyk, GPS Evidence for a Coherent Plate and for Postglacial Rebound in Marie Byrd Land, West Antarctica, *Global and Planetary Change*, in press.

Donnellan, A., J. Rundle, J. Ries, G. Fox, M. Pierce, J. Parker, R. Crippen, E. DeJong, B. Chao, W. Kuang, D. McLeod, M. Mastu'ura, J. Bloxham, Illuminating the Earth's Interior Through Advanced Computing, *Computing in Science and Engineering (CiSE),)*, **6**, 36-44 , 2004.

Glasscoe, M. **Donnellan, A.**, L. Kellogg, and M. Glasscoe, Strain partitioning across metropolitan Los Angeles, *Pure and Appl. Geophys. (PAGEOPH)*, 161, 2004.

Donnellan, A., J. Parker, and G. Peltzer, Combined GPS and InSAR models of postseismic deformation from the Northridge earthquake, *PAGEOPH*, 2261–2270, 2002.

Granat, R., and **A. Donnellan**, Deterministic annealing hidden Markov models for geophysical data exploration, *PAGEOPH*, 2271–2284, 2002.

Matsu-ura, M., P. Mora, **A. Donnellan**, X. Yin, eds., Earthquake Processes: Physical Modeling, Numerical Simulation and Data Analysis, Parts I and II, *PAGEOPH,* 1905–1907 and 2169–2171, 2002.

Hurst, K.J., D. Argus, **A. Donnellan**, M.B. Heflin, D. Jefferson, G.A. Lyzenga, J.W. Parker, F.H. Webb, J.F. Zumberge, The Co- and Immediate Post-seismic geodetic signature of the 1999 Hector Mine Earthquake, Geophys. Res. Lett., **27**, 2733–2736, 2000.

Fox, G.C., Ken Hurst, Andrea Donnellan, and Jay Parker, "Introducing a New Paradigm for Computational Earth Science - A web-object-based approach to Earthquake Simulations", a chapter in AGU monograph on Physics of Earthquakes, edited by John Rundle and published by AGU in 2000.

Lyzenga, G.A., W.R. Panero, **A. Donnellan**, The Influence of Anelastic Surface Layers on Postseismic Thrust Fault Deformation, *J. Geophys. Res.,* **105**, 3151–3157, 2000.

Lundgren, P., M. Protti, **A. Donnellan**, M. Heflin, E. Hernandez, D. Jefferson, Seismic cycle and plate margin deformation in Costa Rica: GPS observations 1994–1997, *J. Geophys. Res.*, **104**, 28,915–28,926, 1999.

Hager, B.H., G.A. Lyzenga, **A. Donnellan**, and D. Dong, Reconciling Rapid Strain Accumulation with Deep Seismogenic Fault Planes in the Ventura Basin, California, *J. Geophys. Res.,* **104**, 25,207–25,219, 1999.

Argus, D., M.B. Heflin, **A. Donnellan**, F.H. Webb, D. Dong, K.J. Hurst, G.A. Lyzenga, M.M. Watkins, and J.F. Zumberge, Shortening and Thickening of Metropolitan Los Angeles Measured and Inferred Using Geodesy, *Geology,* **27**, 703–706, 1999.

Donnellan, A. and G. A. Lyzenga, Fault afterslip and upper crustal relaxation following the Northridge earthquake, *J. Geophys. Res.*, **103**, 21,285–21,297, 1998.

Donnellan, A. and F.H. Webb, Geodetic observations of the M 5.1 January 29, 1994 Northridge aftershock, *Geophys. Res. Lett.*, **25**, 667–670, 1998.

Heflin, M.B., D. Dauger, D. Dong, **A. Donnellan**, K. Hurst, D. Jefferson, G. Lyzenga, M. Watkins, F. Webb, J. Zumberge, Rate change observed at JPLM after the Northridge earthquake, *Geophys. Res. Lett.*, **25**, 93–96, 1998.

Bawden, G., **A. Donnellan**, L. Kellogg, D. Dong, J. Rundle, Geodetic measurements of seven decades of hortizontal strain near the White Wolf fault, Kern County California: I. Observations, *J. Geophys. Res.*, **102**, 4957–4976, 1997.

Jones, L., K. Aki, M. Celebi, **A. Donnellan**, J. Hall, R. Harris, E. Hauksson, T. Heaton, S. Hough, K. Hudnut, K. Hutton, M. Johnston, W. Joyner, H. Kanamori, G. Marshall, A. Michael, J. Mori, M. Murray, D. Ponti, P. Reasenberg, D. Schwartz, L. Seeber, A. Shakal, R. Simpson, H. Thio, M. Todorovska, M. Trifunic, D. Wald, and M. L. Zobak, The Magnitude 6.7 Northridge California, Earthquake of January 17, 1994, *Science*, **266**, 389–397, 1994.

Donnellan, A., B. H. Hager, and R. W. King, Discrepancy between geologic and geodetic deformation rates in the Ventura basin, *Nature,* **366**, 333–336, 1993.

Donnellan, A., B. H. Hager, R. W. King, and T. A. Herring, Geodetic measurement of deformation in the Ventura basin region, southern California, *J. Geophys. Res.,* **98**, 21,727–21,739, 1993.

JOHN B. RUNDLE

Professional Preparation/Professional Training

Ph.D., Geophysics and Space Physics, UCLA (1976)

M.S., Planetary and Space Science, UCLA (1973)

B.S.E. Engineering Physics, Princeton University (1972), *magma cum laude*

Recent Honors and Awards

Distinguished Visiting Scientist, Jet Propulsion Laboratory, 1996-present

Aki Award for Distinguished Service as Chair (1994-1996) of the Adv. Board of the Southern Cal. Earthquake Ctr., Given at the Southern Cal. Earthquake Center Annual Meeting, 2001.

4th Edward Lorenz Lecturer, American Geophysical Union Meeting, Fall, 2004.

Elected Fellow, American Physical Society, 2005

Selected for inclusion in Who's Who in American, 60th edition, 2005

Recent Appointments

Professor of Physics, Engineering, and Geology, University of California, Davis (2002-)

Director, Center for Computational Science & Engineering, Univ. of California, Davis (2002-)

Professor, Department of Physics, and Fellow, Cooperative Institute for Research in Environmental Sciences, University of Colorado (1996–2002)

Director, Colorado Center for Chaos & Complexity, (1997-2002)

Deputy Director, Cooperative Institute for Research in Environmental Science, (1998-)

Five Related Publications:

J.B. Rundle, PB Rundle, A Donnellan, D Turcotte, R Shcherbakov, P Li, BD Malamud, LB Grant, GC Fox, D McLeod, G Yakovlev, J Parker, W Klein, KF Tiampo, A simulation-based approach to forecasting the next great San Francisco earthquake, *Proc. Nat. Acad. Sci*., 102: 15363-15367 (2005) ; published online before print October 11 2005, 10.1073/pnas.0507528102

J.R. Holliday, K.Z. Nanjo, K.F. Tiampo, J.B. Rundle and D.L. Turcotte, Earthquake forecasting and its verification, *Nonlin. Proc. Geophys*., 12, 965-977 (2005).

JB Rundle, DL Turcotte, C Sammis, W Klein and R. Shcherbakov, Statistical physics approach to understanding the multiscale dynamics of earthquake fault systems, *Rev. Geophys. Space Phys*., **41**(4), DOI 10.1029/2003RG000135 (2003).

J.B. Rundle, K.F. Tiampo, W. Klein and J.S.S. Martins, Self-organization in leaky threshold systems: The influence of near mean field dynamics and its implications for earthquakes, neurobiology and forecasting, *Proc. Nat. Acad. Sci*. USA, **99**, Supplement 1, 2514-2521, (2002)

Rundle, JB, D.L Turcotte and W. Klein, editors, *Geocomplexity and the Physics of Earthquakes*, American Geophysical Union monograph 120, American Geophysical Union, Washington, DC (2000). See esp. pp. 43-72, pp. 127-146, pp. 211-218, articles by JBR et al..

Synergistic Activities

JUST (International Workshops on *Application of Space Technology to Combat Natural Disasters*, Tsukuba, Japan, US Delegate, November 1993, 1998

NASA, *Earth System Science Advisory Committee* (Committee Advisory to the Associate Administrator of NASA for Mission to Planet Earth, June 1994 - 1999

Jet Propulsion Laboratory, *Technical Divisions Advisory Board*, 2002-. Member

Jet Propulsion Laboratory, Visiting Committee, Earth and Space Science Division, Pasadena, CA, 2005, *Member*

International Science Committee, Advisory to the Australian Computational Earth Systems Simulator, a Major National Research Facility, September, 2003, *Member* http://www.access.edu.au/frames.htm

NASA Capability Roadmap Team, Modeling and Simulation, January, 2005, *Member*

NASA Working Group on Synthetic Aperture Radar Interferometry, October, 2004 , *Member*

Geoffrey Charles Fox

Phone: 8122194643(Cell), 8128567977(Lab), 8128553788(CS) **Fax** 8128567972(Lab)
Email: gcf@indiana.edu, gcf@cs.indiana.edu

Computer Science Department	Community Grids Laboratory
228 Lindley Hall	Indiana University
Bloomington Indiana 47405	501 N. Morton, Suite 224

Education:

B.A. in Mathematics from Cambridge Univ., Cambridge, England (1961-1964)
Ph.D. in Theoretical Physics from Cambridge University (1964-1967)
M.A. from Cambridge University (1968)

Professional Experience:

2001-	Professor of Computer Science, Informatics, and Physics. Indiana University
2001-	Dir. of Community Grids Laboratory; Pervasive Techn. Laboratories at Indiana University
2000-2001	Professor of Computer Science, Florida State University
2000-2001	Associate Director of School for Computational Science and Information Technology -- Director of Computational Science and Information Laboratory
2000-2001	Chief Technologist of Office of Distributed and Distance Learning, FSU
2000-	Distinguished Visiting Scientist, JPL
1990-2002	Professor of Computer Science, Syracuse University
1990-2002	Professor of Physics, Syracuse University
1990-2000	Director of Northeast Parallel Architectures Center, Syracuse University
1989-2004	Visiting Professor in Computer Science, Rice University
1979-1990	Professor of Physics, California Inst. of Tech.
1986-1988	Associate Provost for Computing, California Inst. of Tech.
1983-1985	Dean for Educational Computing, California Inst. of Tech.
1981-1983	Executive Officer of Physics, California Inst. of Tech.
1974-1979	Associate Professor of Physics, California Inst. of Tech.
1971-1974	Assistant Professor of Physics, California Inst. of Tech.
1970-1971	Millikan Research Fellow in Theoretical Physics, Caltech
1970	Visiting Scientist, Brookhaven National Laboratory, Long Island
1969-1970	Research Fellow at Peterhouse College, Cavendish Lab.,Cambridge
1968-1969	Research Scientist, Lawrence Berkeley Lab., Berkeley, Calif.
1967-1968	Member of School of Natural Science, Inst. for Advanced Study, Princeton, New Jersey

Selected List of Publications (Selected from over 400 in Computer Science, Computational Science and Physics)

1) "Grid Computing: Making the Global Infrastructure a Reality" edited by Fran Berman, Geoffrey Fox and Tony Hey, John Wiley & Sons, Chicester, England, ISBN 0-470-85319-0, February 2003
2) Malcolm Atkinson, David DeRoure, Alistair Dunlop, Geoffrey Fox, Peter Henderson, Tony Hey, Norman Paton, Steven Newhouse, Savas Parastatidis, Anne Trefethen and Paul Watson.Web Service Grids: An Evolutionary Approach UK e-Science Technical Report July 13 2004 Special Issue on Grid Architecture of Concurrency&Computation: Practice and Experience 17, 377-389 (2005) http://www.nesc.ac.uk/technical_papers/UKeS-2004-05.pdf
3) Andrea Donnellan, John Rundle, Geoffrey Fox Dennis McLeod, Lisa Grant, Terry Tullis, Marlon Pierce, Jay Parker, Greg Lyzenga *QuakeSim and the Solid Earth Research Virtual Observatory* To be published in Special Issue of Pure and Applied Geophysics (PAGEOPH) for Beijing ACES Meeting July 2004 http://grids.ucs.indiana.edu/ptliupages/publications/PAGEOPHDonnellan.doc
4) Fox, G.C., Ken Hurst, Andrea Donnellan, and Jay Parker, "Introducing a New Paradigm for Computational Earth Science – A web-object-based approach to Earthquake Simulations", a chapter in AGU monograph on *GeoComplexity and the Physics of Earthquakes* edited by John Rundle, Donald Turcotte and William Klein and published by AGU in 2000, pp 219-245. http://www.new-npac.org/users/fox/documents/gempapermarch00.

Marlon Pierce
Community Grids Lab, Indiana University
501 N. Morton Street, Bloomington IN 47404
Phone: 812-856-1212 Cell: 812-320-5402 FAX:812-856-7972
Email: marpierc@indiana.edu

Research Interests: Developing tools for computational science based on emerging Internet and computational Grid technologies.

Education

- Ph.D. in Physics, December 1998, Florida State University, under the direction of Professor E. Manousakis. Thesis titled ``Path Integral Monte Carlo Simulation of Helium Adsorbed on Graphite".
- B.S. in Physics, Suma cum laude, 1990, Louisiana Tech University

Professional Appointments

2001-Present: Senior Research Associate, Community Grids Lab, Indiana University.

1999-2001: Information and Communication/Enabling Technologies On-Site Lead, Aeronautical Systems Center Major Shared Resource Center for the Department of Defense High Performance Computing Modernization Program.

1999: Postdoctoral Researcher, Florida State University

Selected Publications

Marlon E. Pierce, Geoffrey Fox, Choon-Han Youn, Stephen Mock, Kurt Mueller, Ozgur Balsoy: Interoperable Web services for computational portals. SC 2002: 1-12.

Marlon E. Pierce, Choonhan Youn, Geoffrey Fox: Interacting Data Services for Distributed Earthquake Modeling. International Conference on Computational Science 2003: 863-872.

Geoffrey Fox, Shrideep Pallickara, Marlon Pierce, Harshawardhan Gadgil, Building Messaging Substrates for Web and Grid Applications. Accepted for publication in special Issue on *Scientific Applications of Grid Computing* in Philosophical Transactions of the Royal Society of London 2005.

Mehmet Aktas, Galip Aydin, Andrea Donnellan, Geoffrey Fox, Robert Granat , Lisa Grant, Greg Lyzenga, Dennis McLeod, Shrideep Pallickara, Jay Parker, Marlon Pierce, John Rundle, Ahmet Sayar, and Terry Tullis iSERVO: Implementing the International Solid Earth Research Virtual Observatory by Integrating Computational Grid and Geographical Information Web Services Technical Report December 2004, To be published in Special Issue of Pure and Applied Geophysics (PAGEOPH) for Beijing ACES Meeting July 2004.

Summary of Research Interests:

Pierce's research interests are in the overlap of computational science and Web technology. His work includes building component-based computational Web portals and designing services for managing earthquake science applications. He is also leading efforts to integrate Geographical Information Systems services with scientific computing.

Curriculum Vitae for Lisa B. Grant, Ph.D.

Dept. Environmental Health, Science & Policy, University of California
Irvine, CA 92697-7070
lgrant@uci.edu tel 949-824-5491 fax 949-824-2056

Professional Preparation

Stanford University	Environmental Earth Science	B.S., 1985
Caltech	Environmental Engineering & Science	M.S., 1989
Caltech	Geology	M.S., 1990
Caltech	Geology and Geophysics	Ph.D., 1993

Appointments

Assistant Professor
Dept. of Environmental Health, Science & Policy, UC Irvine, 7-98 to present
Assistant Professor
Dept. of Environmental and Chemical Sciences, Chapman University 8/95 - 6/98
Assistant Project Scientist
Woodward-Clyde Consultants, Geo-Engineering Group, 6/93 - 7/95
Graduate Research and Teaching Assistant
Caltech, Division of Geological & Planetary Sciences, 3/88-5/93
Research Scientist
California Research and Technology / Titan Systems, 1/85-7/87

Selected Publications

1. **Grant, L. B.**, Gould, M. M., Donnellan, A., McLeod, D., Chen, A. Y., Sung, S., Pierce, M., Fox, G. C., and Rundle, P., A Web-service based universal approach to heterogeneous fault databases, *Computing in Science and Engineering*, July/Aug. 2005, p. 51- 57.
2. Rundle, J. B., Rundle, P. B., Donnellan, A., Turcotte, D. L., Scherbakov, R., Li P., Malamud, B. D., **Grant, L. B.**, Fox, G. C., McLeod, D., Yakolev, G., Parker, J., Klein, W. and K. F. Tiampo. A simulation-based approach to forecasting the next great San Francisco earthquake, *Proeeding. National Academy of Sciences*,(www.pnas.org/cgi/doi/10.1073/pnas.0507528102) 1-5, 2005
3. **Grant, L. B.** and M. M. Gould. Assimilation of paleoseismic data for earthquake simulation. *Pure and Applied Geophysics*, 161, no. 11/12, 2295-2306, 2004
4. **Grant, L. B.** (2002). Paleoseismology. Chapter 30 In "IASPEI International Handbook of Earthquake and Engineering Seismology" (W. H. Lee, H. Kanamori, and P.C. Jennings, Eds.), International Association of Seismology and Physics of the Earth's Interior, v. 81A, p. 475-489.
5. **Grant, L. B.** and W. R. Lettis (2002). Introduction to the Special Issue on Paleoseismology of the San Andreas Fault System, In (**Grant, L. B.** and Lettis, W. R., Eds.) *Paleoseismology of the San Andreas Fault System* Bulletin Seismological Society of America, v.92, no. 7, 2551-2554.

Synergistic activities:

Member, U. S. National Committee (USNC) for the International Union of Geophysics and Geodesy (IUGG) sponsored by the National Academy of Sciences (2004 to present)
Member, Board of Directors, Southern California Earthquake Center (2002 to present)

Dennis McLeod
Professor, Computer Science Department
University of Southern California
Los Angeles, CA 90089-0781
Phone: (213) 740-4504
E-mail: mcleod@usc.edu

Professional Preparation

- Ph.D. in Computer Science, Massachusetts Institute of Technology (MIT), August 1978.
- M.S. in Computer Science, MIT, May 1976.
- B.S. in Electrical Engineering and Computer Science, MIT, February 1974.

Appointments

- Professor of Computer Science (tenured), University of Southern California (USC), September 1991 to present.
- Strategic Scientist, USC Integrated Media Systems Center (IMSC), September 1996 to present.
- Associate Professor of Computer Science (tenured), USC, September 1983 to August 1991.
- Assistant Professor of Computer Science, USC, September 1978 to August 1983.
- Research and Teaching Assistant, Massachusetts Institute of Technology (MIT), Laboratory for Computer Science, 1974 to 1978.
- Research Staff, IBM Research Laboratory, San Jose CA, 1975 (summer).
- Software Systems Manager, Forest Hospital, 1974 to 1975.
- Programmer/Analyst, Behavior Reviews Inc., 1971 to 1974.

Selected Recent Publications

Chung, S., and McLeod, D., "Dynamic Pattern Mining: An Incremental Data Clustering Approach", *Journal on Data Semantics*, Springer Lecture Notes in Computer Science, 2005 (to appear).

Khan, L., McLeod, D., and Hovy, E., "Retrieval Effectiveness of an Ontology-Based Model for Information Selection", *The VLDB Journal*, Volume 13, Number 1, Pages 71-85, 2004.

Donnellan, A., Rundle, J., McLeod, D. et.al., "Illuminating the Earth's Interior through Advanced Computing", *Computing in Science and Engineering*, Volume 6, Number 1, Pages 36-44, January/February 2004.

Shin, H., McLeod, D., and Pryor, L. "Automatic Generation of User-Customized Multimedia Presentations", *Proceedings of Information Resources Management Association International Conference*, New Orleans LA, May 2004.

Alfuraih, S., Sui, N., and McLeod, D., "Using Trusted Email to Prevent Credit Card Fraud in Multimedia Products", *World Wide Web: Internet and Web Information Systems*, Volume 6, 2003, Pages 244-256.

Chung, S. and McLeod, D., "Dynamic Topic Mining from a News Stream", *International Conference on Ontologies, Databases, and Application of Semantics*, Catania, Sicily (Italy), November 2003.

Chen, A., Donnellan, A., McLeod, D., Fox, G., Parker, J., Rundle, J., Grant, L., Pierce, M., Gould, M., Chung, S., and Gao, S., "Interoperability and Semantics for Heterogeneous Earthquake Science Data", *International Workshop on Semantic Web Technologies for Searching and Retrieving Scientific Data*, Sanibel Island FL, October 2003.

Aslan, G., and McLeod, D., "Semantic Heterogeneity Resolution in Federated Databases by Metadata Implantation and Stepwise Evolution", *International Journal on Very Large Databases*, Volume 8, Number 2, 1999, Pages 120-132.

Synergistic Activities

IMSC communications vision project – collaborative multi-disciplinary effort centering on multi-way interpersonal multimedia communication

Personalized, multimedia information presentation and interaction environments – inter-disciplinary study with communication and human factors researchers

QuakeSim and SERVO - Earthquake science database, simulation, and web services project with NASA, JPL, the University of Indiana, The University of California – Davis, and the University of California, Irvine.

Current and Pending Support

Current and Pending Support

(See GPG Section II.D.8 for guidance on information to include on this form.)

The following information should be provided for each investigator and other senior personnel. Failure to provide this information may delay consideration of this proposal.

Investigator: Andrea Donnellan

Other agencies (including NSF) to which this proposal has been/will be submitted.
none

Support: ☒ Current ☐ Pending ☐ Submission Planned in Near Future ☐ *Transfer of Support
Project/Proposal Title:
InSAR Study Science

Source of Support: NASA/RTOP
Total Award Amount: $300K Total Award Period Covered: 10/05 - 9/06
Location of Project: JPL
Person-Months Per Year Committed to the Project. 0.75 Cal: 9 Acad: Sumr:

Support: ☒ Current ☐ Pending ☐ Submission Planned in Near Future ☐ *Transfer of Support
Project/Proposal Title:
Complexity Computational Environment: Data Assimilation SERVOGrid

Source of Support: NASA/AIST
Total Award Amount: $1500K Total Award Period Covered: 3/03 - 3/06
Location of Project: JPL
Person-Months Per Year Committed to the Project. 0.05 Cal: 0.6 Acad: Sumr:

Support: ☐ Current ☒ Pending ☐ Submission Planned in Near Future ☐ *Transfer of Support
Project/Proposal Title:
Integrating QuakeSim and InSAR into HAZUS-MH and OpenSHA
Disaster Management (This proposal)
Source of Support: NASA Applications
Total Award Amount: $1787.5K Total Award Period Covered: 4/06 - 3/09
Location of Project: JPL
Person-Months Per Year Committed to the Project. 0.25 Cal: 3 Acad: Sumr:

Support: ☐ Current ☐ Pending ☐ Submission Planned in Near Future ☐ *Transfer of Support
Project/Proposal Title:

Source of Support:
Total Award Amount: $ Total Award Period Covered:
Location of Project:
Person-Months Per Year Committed to the Project. Cal: Acad: Sumr:

Current and Pending Support

See GPG Section II.D.8 for guidance on information to include on this form.)

The following information should be provided for each investigator and other senior personnel. Failure to provide this information may delay consideration of this proposal.

Investigator: John B. Rundle

Other agencies (including NSF) to which this proposal has been/will be

Support: ☒ Current ☐ Pending ☐ Submission Planned in Near Future ☐ *Transfer of Support

Project/Proposal Title: Collaborative Research: Emergent Modes on Earthquake Fault Systems: Illuminating the Between Observational Data and the Underlying Dynamics of Fault Networks Using Numerical Simulations and Theory

Source of Support: Southern California Earthquake Center (SCEC), USC

Total Award Amount: $47,000 Total Award Period Covered: 7/1/02–1/31/07

Location of Project: University of California, Davis

Person-Months Per Year Committed to the Cal: Acad: Sumr: .25 (2002 & 2004)

Support: ☒ Current ☐ Pending ☐ Submission Planned in Near Future ☐ *Transfer of Support

Project/Proposal Title: Analysis of SCIGN Data: Evaluation of Topographic Surface Changes and their Implication for Future Deformation and Earthquake Processes in California

Source of Support: NASA

Total Award Amount: $162,000 Total Award Period Covered: 9/1/03–8/31/06

Location of Project: University of California, Davis

Person-Months Per Year Committed to the Cal: Acad: Sumr: .50

Support: ☒ Current ☐ Pending ☐ Submission Planned in Near Future ☐ *Transfer of Support

Project/Proposal Title: Complexity Computational Environments: Data Assimilation SERVO Grid

Source of Support: Jet Propulsion Laboratory (JPL)

Total Award Amount: $180,000 Total Award Period Covered: 12/13/03-4/30/06

Location of Project: University of California, Davis

Person-Months Per Year Committed to the Cal: Acad: Sumr: .50

Support: ☒ Current ☐ Pending ☐ Submission Planned in Near Future ☐ *Transfer of Support

Project/Proposal Title: Collaborative Research: Understanding Multi-Scale Space-Time Patterns in Crustal Deformation Processes: Towards Ensemble Forecasting in Complex Tectonic Systems

Source of Support: Department of Energy (DOE)

Total Award Amount: $428,297 Total Award Period Covered: 9/15/04-11/14/07

Location of Project: University of California, Davis

Person-Months Per Year Committed to the Cal: Acad: Sumr: 1.00

Support: ☒ Current ☐ Pending ☐ Submission Planned in Near Future ☐ *Transfer of Support

Project/Proposal Title: W. M. Keck Center for Active Visualization in the Earth Sciences (CAVES)

Source of Support: W.M. Keck Foundation

Total Award Amount: $1,000,000 Total Award Period Covered: 1/1/04-12/13/06

Location of Project: University of California, Davis

Person-Months Per Year Committed to the Cal: Acad: Sumr: .05

*If this project has previously been funded by another agency, please list and furnish information for immediately preceding funding period.

Current and Pending Support

See GPG Section II.D.8 for guidance on information to include on this form.)

The following information should be provided for each investigator and other senior personnel. Failure to provide this information may delay consideration of this proposal.

Investigator: John B. Rundle

Other agencies (including NSF) to which this proposal has been/will be

Support: ☐ Current ☒ Pending ☐ Submission Planned in Near Future ☐ *Transfer of Support

Project/Proposal Title: Earthquake Probabilities in the Southern California Region Using Numerical Simulations

Source of Support: U.S. Geological Survey (USGS)

Total Award Amount: $179,515 Total Award Period Covered: 1/1/06-12/31/07

Location of Project: University of California, Davis

Person-Months Per Year Committed to the Cal: Acad: Sumr: .25

Support: ☐ Current ☒ Pending ☐ Submission Planned in Near Future ☐ *Transfer of Support

Project/Proposal Title: Data Mining and Pattern Informatics Applications to NASA Space Geodetic Data: Developing the Technology for Earthquake Forecasting

Source of Support: NASA

Total Award Amount: $448,503 Total Award Period Covered: 1/1/06-12/31/08

Location of Project: University of California, Davis

Person-Months Per Year Committed to the Cal: Acad: Sumr: .50

Support: ☐ Current ☒ Pending ☐ Submission Planned in Near Future ☐ *Transfer of Support

Project/Proposal Title: Life's Impring

Source of Support: NASA

Total Award Amount: $9,510,631 Total Award Period Covered: 7/1/06-6/30/11

Location of Project: University of California, Davis

Person-Months Per Year Committed to the Cal: Acad: Sumr: 1.00

Support: ☐ Current ☒ Pending ☐ Submission Planned in Near Future ☐ *Transfer of Support

Project/Proposal Title: Integrating QuakeSim and InSAR into the HAZUS-MH Disaster Management Earthquake Module (this proposal)

Source of Support: JPL/NASA

Total Award Amount:225,000 Total Award Period Covered: 4/3/06-4/2/09

Location of Project: University of California, Davis

Person-Months Per Year Committed to the Cal: Acad: Sumr: .05

Support: ☐ Current ☒ Pending ☐ Submission Planned in Near Future ☐ *Transfer of Support

Project/Proposal Title:

Source of Support:

Total Award Amount: Total Award Period Covered:

Location of Project: University of California, Davis

Person-Months Per Year Committed to the Cal: Acad: Sumr:

*If this project has previously been funded by another agency, please list and furnish information for immediately preceding funding period.

NSF Form 1239 (7/96) USE ADDITIONAL SHEETS AS NECESSARY

Current and Pending Support

(See GPG Section II.D.8 for guidance on information to include on this form.)

The following information should be provided for each investigator and other senior personnel. Failure to provide this information may delay consideration of this proposal.

Investigator: Geoffrey Fox

Other agencies (including NSF) to which this proposal has been/will be submitted.

Support: ☒ Current ☐ Pending ☐ Submission Planned in Near Future ☐ *Transfer of Support

Project/Proposal Title:

Virtual Laboratory for Earth and Planetary Materials Studies

Source of Support: National Science Foundation

Total Award Amount: $166227 Total Award Period Covered: 10/1/04-9/30/08

Location of Project: Indiana University

Person-Months Per Year Committed to the Project. Cal: 0.0 Acad: Sumr:

Support: ☒ Current ☐ Pending ☐ Submission Planned in Near Future ☐ *Transfer of Support

Project/Proposal Title:

Development of Middleware to Allow Visualization and Analysis of Large and Complex Geoscience Data Sets

Source of Support: National Science Foundation

Total Award Amount: $199020 Total Award Period Covered: 6/1/05-5/31/08

Location of Project: Indiana University

Person-Months Per Year Committed to the Project. Cal: 0.0 Acad: Sumr:

Support: ☒ Current ☐ Pending ☐ Submission Planned in Near Future ☐ *Transfer of Support

Project/Proposal Title:

FIRMS: Federation and Implementation of Reliable Messaging Specifications for Web Services

Source of Support: University of Southampton, UK

Total Award Amount: $158570 Total Award Period Covered: 9/1/04-6/30/06

Location of Project: Indiana University

Person-Months Per Year Committed to the Project. Cal: 0.6 Acad: Sumr:

Support: ☒ Current ☐ Pending ☐ Submission Planned in Near Future ☐ *Transfer of Support

Project/Proposal Title:

FINS: Federation and Implementation of Notication Specifiations for Web Services

Source of Support: Univeristy of Southampton, UK

Total Award Amount: $307247 Total Award Period Covered: 9/1/04-6/30/06

Location of Project: Indiana University

Person-Months Per Year Committed to the Project. Cal: 0.6 Acad: Sumr:

Support: ☒ Current ☐ Pending ☐ Submission Planned in Near Future ☐ *Transfer of Support

Project/Proposal Title:

Middleware for Grid Portal Development

Source of Support: National Science Foundation

Total Award Amount: $868803 Total Award Period Covered: 9/1/03-8/31/06

Location of Project: Indiana University

Person-Months Per Year Committed to the Project. Cal: 0.0 Acad: Sumr:

Current and Pending Support

(See GPG Section II.D.8 for guidance on information to include on this form.)

The following information should be provided for each investigator and other senior personnel. Failure to provide this information may delay consideration of this proposal.

Investigator: Geoffrey Fox

Other agencies (including NSF) to which this proposal has been/will be submitted.

Support: ☒ Current ☐ Pending ☐ Submission Planned in Near Future ☐ *Transfer of Support
Project/Proposal Title:
Complecity Computational Environments: Data Addimilation SERVO Grid

Source of Support: Jet Propulsion Laboratory (NASA)
Total Award Amount: $407000 Total Award Period Covered: 9/12/03-3/31/06
Location of Project: Indiana University
Person-Months Per Year Committed to the Project. Cal: 0.6 Acad: Sumr:

Support: ☒ Current ☐ Pending ☐ Submission Planned in Near Future ☐ *Transfer of Support
Project/Proposal Title:
Portal Web Services: Support of DOE SciDAC Collaboratories

Source of Support: University of Texas at Austin (Subaward)
Total Award Amount: $630510 Total Award Period Covered: 9/1/02-8/31/06
Location of Project: Indiana University
Person-Months Per Year Committed to the Project. Cal: 0.6 Acad: Sumr:

Support: ☒ Current ☐ Pending ☐ Submission Planned in Near Future ☐ *Transfer of Support
Project/Proposal Title:
Indiana Compute Science Research Infrastructure

Source of Support: National Science Foundation
Total Award Amount: $1311875 Total Award Period Covered: 9/1/02-8/31/07
Location of Project: Indiana University
Person-Months Per Year Committed to the Project. Cal: 0.0 Acad: Sumr:

Support: ☒ Current ☐ Pending ☐ Submission Planned in Near Future ☐ *Transfer of Support
Project/Proposal Title:
Acquisition of a High-Speed, High-Capacity Storage System to
Support Scientific Computing: the Data Capacitor
Source of Support: National Science Foundation
Total Award Amount: $1720000 Total Award Period Covered: 10/1/05-9/30/08
Location of Project: Indiana University
Person-Months Per Year Committed to the Project. Cal: 0.0 Acad: Sumr:

Support: ☒ Current ☐ Pending ☐ Submission Planned in Near Future ☐ *Transfer of Support
Project/Proposal Title:
High Performance Techniques, Designs and Implementation of
Software Infrastructure for Change Detection and Mining
Source of Support: Indiana University
Total Award Amount: $371850 Total Award Period Covered: 9/1/05-8/31/08
Location of Project: Indiana University
Person-Months Per Year Committed to the Project. Cal: 0.24 Acad: Sumr:

*If this project has previously been funded by another agency, please list and furnish information for immediately preceding funding period.

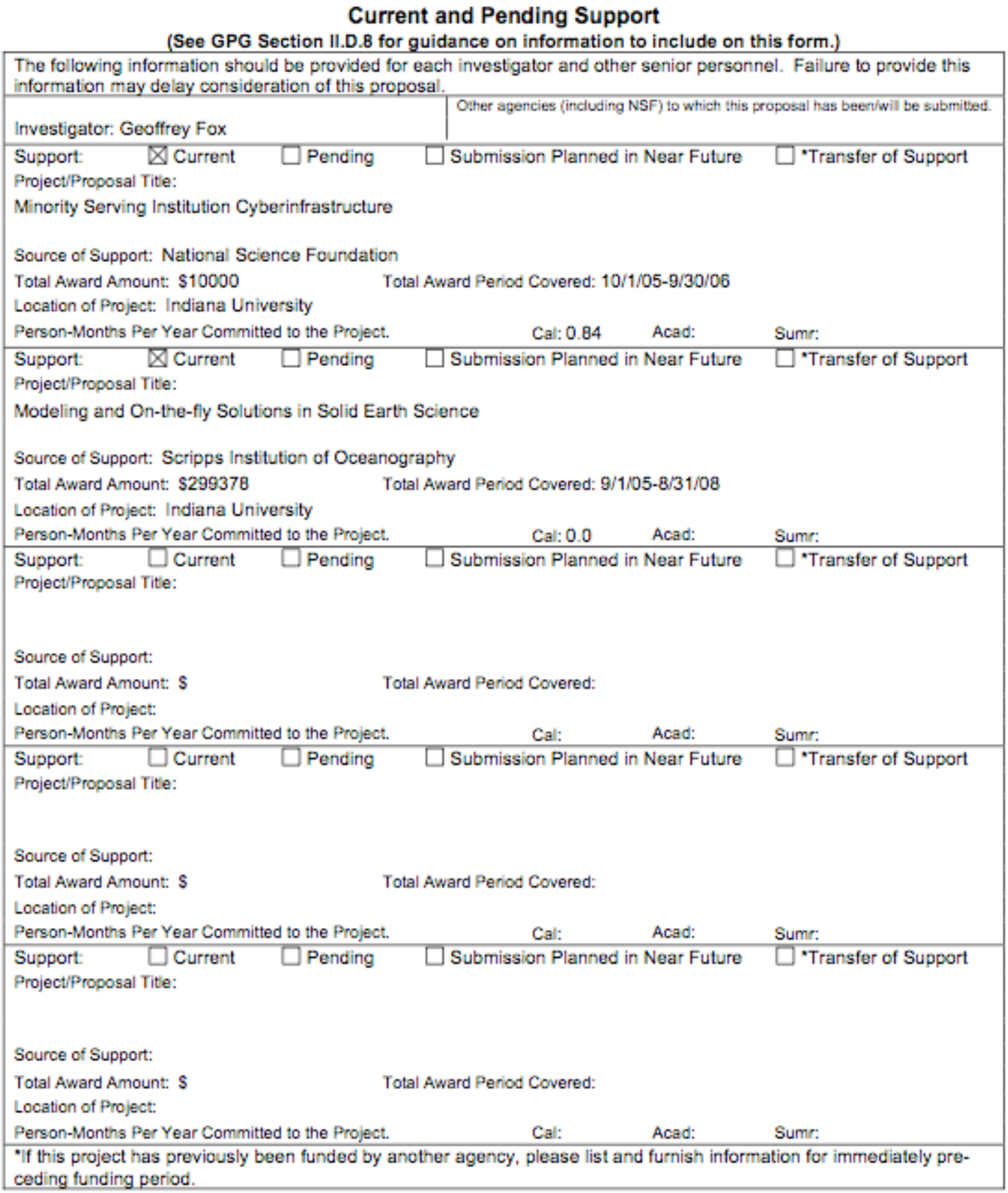

Current and Pending Support

(See GPG Section II.D.8 for guidance on information to include on this form.)

The following information should be provided for each investigator and other senior personnel. Failure to provide this information may delay consideration of this proposal.

Investigator: Geoffrey Fox

Other agencies (including NSF) to which this proposal has been/will be submitted.

Support: ☒ Current ☐ Pending ☐ Submission Planned in Near Future ☐ *Transfer of Support
Project/Proposal Title:
Minority Serving Institution Cyberinfrastructure

Source of Support: National Science Foundation
Total Award Amount: $10000 Total Award Period Covered: 10/1/05-9/30/06
Location of Project: Indiana University
Person-Months Per Year Committed to the Project. Cal: 0.84 Acad: Sumr:

Support: ☒ Current ☐ Pending ☐ Submission Planned in Near Future ☐ *Transfer of Support
Project/Proposal Title:
Modeling and On-the-fly Solutions in Solid Earth Science

Source of Support: Scripps Institution of Oceanography
Total Award Amount: $299378 Total Award Period Covered: 9/1/05-8/31/08
Location of Project: Indiana University
Person-Months Per Year Committed to the Project. Cal: 0.0 Acad: Sumr:

Support: ☐ Current ☐ Pending ☐ Submission Planned in Near Future ☐ *Transfer of Support
Project/Proposal Title:

Source of Support:
Total Award Amount: $ Total Award Period Covered:
Location of Project:
Person-Months Per Year Committed to the Project. Cal: Acad: Sumr:

Support: ☐ Current ☐ Pending ☐ Submission Planned in Near Future ☐ *Transfer of Support
Project/Proposal Title:

Source of Support:
Total Award Amount: $ Total Award Period Covered:
Location of Project:
Person-Months Per Year Committed to the Project. Cal: Acad: Sumr:

Support: ☐ Current ☐ Pending ☐ Submission Planned in Near Future ☐ *Transfer of Support
Project/Proposal Title:

Source of Support:
Total Award Amount: $ Total Award Period Covered:
Location of Project:
Person-Months Per Year Committed to the Project. Cal: Acad: Sumr:

*If this project has previously been funded by another agency, please list and furnish information for immediately preceding funding period.

Current and Pending Support

(See GPG Section II.D.8 for guidance on information to include on this form.)

The following information should be provided for each investigator and other senior personnel. Failure to provide this information may delay consideration of this proposal.

Investigator: Marlon Pierce

Other agencies (including NSF) to which this proposal has been/will be submitted.

Support: ☒ Current ☐ Pending ☐ Submission Planned in Near Future ☐ *Transfer of Support
Project/Proposal Title:
Chemical Informatics Cyberinfrastructure

Source of Support: National Institute of Health
Total Award Amount: $731395 Total Award Period Covered: 9/23/05-7/31/07
Location of Project: Indiana University
Person-Months Per Year Committed to the Project. Cal: 1.2 Acad: Sumr:

Support: ☐ Current ☒ Pending ☐ Submission Planned in Near Future ☐ *Transfer of Support
Project/Proposal Title:
Virtual Laboratory for Earth and Planetary Materials Studies

Source of Support: National Science Foundation
Total Award Amount: $166277 Total Award Period Covered: 10/1/04-9/30/08
Location of Project: Indiana University
Person-Months Per Year Committed to the Project. Cal: 3 Acad: Sumr:

Support: ☒ Current ☐ Pending ☐ Submission Planned in Near Future ☐ *Transfer of Support
Project/Proposal Title:
Middleware for Grid Portal Development

Source of Support: National Science Foundation
Total Award Amount: $868803 Total Award Period Covered: 9/1/03-8/31/06
Location of Project: Indiana University
Person-Months Per Year Committed to the Project. Cal: .3.6 Acad: Sumr:

Support: ☒ Current ☐ Pending ☐ Submission Planned in Near Future ☐ *Transfer of Support
Project/Proposal Title:
Complexity and Computational Environments: Data Assimilation SERVO Grid

Source of Support: Jet Propulsion Laboratory (NASA)
Total Award Amount: $407000 Total Award Period Covered: 9/12/05-3/31/06
Location of Project: Indiana University
Person-Months Per Year Committed to the Project. Cal: 1.8 Acad: Sumr:

Support: ☒ Current ☐ Pending ☐ Submission Planned in Near Future ☐ *Transfer of Support
Project/Proposal Title:
Portal Web Services: Support of DOE SciDAC Collaboratories

Source of Support: University of Texas at Austin (Subaward)
Total Award Amount: $630510 Total Award Period Covered: 9/1/02-8/31/06
Location of Project: Indiana University
Person-Months Per Year Committed to the Project. Cal: 0.6 Acad: Sumr:

*If this project has previously been funded by another agency, please list and furnish information for immediately preceding funding period.

NSF Form 1239 (10/99) USE ADDITIONAL SHEETS AS NECESSARY

Current and Pending Support

(See GPG Section II.D.8 for guidance on information to include on this form.)

The following information should be provided for each investigator and other senior personnel. Failure to provide this information may delay consideration of this proposal.

Investigator: Marlon Pierce

Other agencies (including NSF) to which this proposal has been/will be submitted.

Support: ☒ Current ☐ Pending ☐ Submission Planned in Near Future ☐ *Transfer of Support
Project/Proposal Title:
High Performance Techniques, Designs and implementation of
Software Infrastructure for Change Detection and Mining
Source of Support: National Science Foundation
Total Award Amount: $371850 Total Award Period Covered: 9/1/05-8/31/08
Location of Project: Indiana University
Person-Months Per Year Committed to the Project. Cal: 2.4 Acad: Sumr:

Support: ☒ Current ☐ Pending ☐ Submission Planned in Near Future ☐ *Transfer of Support
Project/Proposal Title:
Minority Serving Institution Cyberinfrastructure

Source of Support: National Science Foundation
Total Award Amount: $250000 Total Award Period Covered: 10/1/05-9/30/06
Location of Project: Indiana University
Person-Months Per Year Committed to the Project. Cal: 0.6 Acad: Sumr:

Support: ☒ Current ☐ Pending ☐ Submission Planned in Near Future ☐ *Transfer of Support
Project/Proposal Title:
Managing On-the-fly Solutions in Solid Earth Science

Source of Support: Scripps Institution of Oceanography
Total Award Amount: $299378 Total Award Period Covered: 9/1/05-8/31/08
Location of Project: Indiana University
Person-Months Per Year Committed to the Project. Cal: 1.8 Acad: Sumr:

Support: ☐ Current ☐ Pending ☐ Submission Planned in Near Future ☐ *Transfer of Support
Project/Proposal Title:

Source of Support:
Total Award Amount: $ Total Award Period Covered:
Location of Project:
Person-Months Per Year Committed to the Project. Cal: Acad: Sumr:

Support: ☐ Current ☐ Pending ☐ Submission Planned in Near Future ☐ *Transfer of Support
Project/Proposal Title:

Source of Support:
Total Award Amount: $ Total Award Period Covered:
Location of Project:
Person-Months Per Year Committed to the Project. Cal: Acad: Sumr:

*If this project has previously been funded by another agency, please list and furnish information for immediately preceding funding period.

Current and Pending Support

(See GPG Section II.D.8 for guidance on information to include on this form.)

The following information should be provided for each investigator and other senior personnel. Failure to provide this information may delay consideration of this proposal.

Investigator: Lisa Grant	Other agencies (including NSF) to which this proposal has been/will be submitted. none

Support: ☐ Current ☒ Pending ☐ Submission Planned in Near Future ☐ *Transfer of Support

Project/Proposal Title:

Integrating QuakeSim and InSAR into HAZUS-MH and OpenSHA

Disaster Management (This proposal)

Source of Support: JPL: NASA Applications

Total Award Amount: $90,000K Total Award Period Covered: 4/06 - 3/09

Location of Project: UCI

Person-Months Per Year Committed to the Project. 0.08 Cal: Acad: Sumr: 1

Support: ☐ Current ☒ Pending ☐ Submission Planned in Near Future ☐ *Transfer of Support

Project/Proposal Title:

A long chronology of earthquakes on the San Andreas fault at the Bidart F

Establishing the next level in the quantification and application of the

Source of Support: Southern California Earthquake Center / USC

Total Award Amount: $25,000 Total Award Period Covered: 2/01/06-1/31/07

Location of Project: UCI

Person-Months Per Year Committed to the Project. Cal: Acad: Sumr: 0.5

Support: ☒ Current ☐ Pending ☐ Submission Planned in Near Future ☐ *Transfer of Support

Project/Proposal Title:

Collaborative Research: Multi-Cycle Rupture History of the San Andreas F

Source of Support: NSF

Total Award Amount: $240,247 Total Award Period Covered: 8/15/04 – 7/31/06

Location of Project: UCI

Person-Months Per Year Committed to the Project. Cal: Acad: Sumr: 1

Support: ☒ Current ☐ Pending ☐ Submission Planned in Near Future ☐ *Transfer of Support

Project/Proposal Title:

Active Deformation and Earthquake Potential of the Southern Los Angeles B

Source of Support: USGS

Total Award Amount: $39,318 Total Award Period Covered: 2/01/04-1/31/06

Location of Project: UCI

Person-Months Per Year Committed to the Project. Cal: Acad: Sumr: 1

Current and Pending Support

(See GPG Section II.D.8 for guidance on information to include on this form.)

The following information should be provided for each investigator and other senior personnel. Failure to provide this information may delay consideration of this proposal.

Investigator: Dennis McLeod	Other agencies (including NSF) to which this proposal has been/will be submitted. none

Support: ☐ Current ☒ Pending ☐ Submission Planned in Near Future ☐ *Transfer of Support
Project/Proposal Title:
ntegrating QuakeSim and InSAR into HAZUS-MH and OpenSHA
Disaster Management (This proposal)
Source of Support: JPL: NASA Applications
Total Award Amount: $225K Total Award Period Covered: 4/06 - 3/09
Location of Project: USC
Person-Months Per Year Committed to the Project. 0.08 Cal: 9 Acad: Sumr: 1

Support: ☒ Current ☐ Pending ☐ Submission Planned in Near Future ☐ *Transfer of Support
Project/Proposal Title:
Complexity Computational Environment: Data Assimilation SERVOGrid
Source of Support: JPL: NASA/AIST
Total Award Amount: $435K Total Award Period Covered: 3/03 - 3/06
Location of Project: USC
Person-Months Per Year Committed to the Project. 0.08 Cal: Acad: Sumr: 1

Support: ☒ Current ☐ Pending ☐ Submission Planned in Near Future ☐ *Transfer of Support
Project/Proposal Title:
Integrated Media Systems Center
Source of Support: NSF Engineering Research Center
Total Award Amount: $143K Total Award Period Covered: 7/05 - 6/06
Location of Project: USC
Person-Months Per Year Committed to the Project. 0.08 Cal: Acad: Sumr: 1

Support: ☐ Current ☐ Pending ☐ Submission Planned in Near Future ☐ *Transfer of Support
Project/Proposal Title:
Source of Support:
Total Award Amount: $ Total Award Period Covered:
Location of Project:
Person-Months Per Year Committed to the Project. Cal: Acad: Sumr:

References and Citations

An extensive list of publications from the QuakeSim and SERVO projects are available from http://quakesim.jpl.nasa.gov and http://servo.jpl.nasa.gov.

Abdelnur, A., Chien, E., and Hepper, S., (eds.), Portle Specification 1.0. Available from http://www.jcp.org/en/jsr/detail?id=168, 2003

Aktas, Mehmet, Galip Aydin, Andrea Donnellan, Geoffrey Fox, Robert Granat , Lisa Grant, Greg Lyzenga, Dennis McLeod, Shrideep Pallickara, Jay Parker, Marlon Pierce, John Rundle, Ahmet Sayar, and Terry Tullis iSERVO: Implementing the International Solid Earth Research Virtual Observatory by Integrating Computational Grid and Geographical Information Web Services Technical Report December 2004, To be published in Special Issue of Pure and Applied Geophysics (PAGEOPH) for Beijing ACES Meeting July 2004.

Aktas, Mehmet, Galip Aydin, Andrea Donnellan, Geoffrey Fox, Robert Granat, Greg Lyzenga, Dennis McLeod, Shrideep Pallickara, Jay Parker, Marlon Pierce, John Rundle, and Ahmet Sayar, "Implementing Geographical Information System Grid Services to Support Computational Geophysics in a Service-Oriented Environment." Report for NASA Earth-Sun System Technology Conference University of Maryland, Adelphi, Maryland, June 28 - 30, 2005.

Aktas, Mehmet, Geoffrey C. Fox, Marlon Pierce "An Architecture for Supporting Information in Dynamically Assembled Semantic Grids" Technical report August 2005, accepted for publications in Proceedings of *Semantics, Knowledge, and Grid*, Beijing, China, November 2005.

Applied Research Associates, Inc., National Institute of Building Sciences, and Federal Emergency Management Agency, Research to Develop Advanced Severe Storm Coastal Risk Assessment Methodology Using NASA's WAVEWATCH III and Remote Sensing Technology. Unsolicited proposal, submitted to NASA April 23, 2003, 34 pp., 2003.

Aydin, Galip, Mehmet S. Aktas, Geoffrey C. Fox, Harshawardhan Gadgil, Marlon Pierce, Ahmet Sayar "SERVOGrid Complexity Computational Environments (CCE) Integrated Performance Analysis." In proceedings of GRID2005, Seattle Washington., November 12-13, 2005.

Berman, F., Fox, G., and Hey, T., (eds.). *Grid Computing: Making the Global Infrastructure a Reality*, John Wiley & Sons, Chichester, England, ISBN 0-470-85319-0, http://www.grid2002.org, 2003.

California Earthquake Authority Governing Board Memorandum, Available from http://72.14.203.104/search?q=cache:y3ZWxdNCgrcJ:earthquakeauthority.com/2-24-2005-GB/AI8.pdf+UCERF+California+EArthquake+authority&hl=en, February 24, 2005.

Chen, A., Donnellan, A., McLeod, D., Fox, G., Parker, J., Rundle, J., Grant, L., Pierce, M., Gould, M., Chung, S., and Gao, S., Interoperability and Semantics for Heterogeneous Earthquake Science Data, *International Workshop on Semantic Web*

Technologies for Searching and Retrieving Scientific Data, Sanibel Island, FL, October 2003.

Cox, S., Daisey, P., Lake, R., Portele, C., and Whiteside, A. (eds), *OpenGIS Geography Markup Language (GML) Implementation Specification.* OpenGIS project document reference number OGC 02-023r4, Version 3.0, 2003.

de La Beaujardiere, Jeff, *Web Map Service,* OGC project document reference number OGC 04-024.

Donnellan, A., J. Rundle, G. Fox, D. McLeod, L. Grant, T. Tullis, M. Pierce, J. Parker, G. Lyzenga, R. Granat, M. Glasscoe, QuakeSim and the Solid Earth Research Virtual Observatory, *PAGEOPH*, in press.

Field, E. H., H. A. Seligson, N. Gupta, V. Gupta, T. Hl Jordan and K. W. Campbell, Loss estimates for a Puente Hills blind-thrust earthquake in Los Angeles, California, *Earthquake Spectra*, **21** (2), 329-338, May 2005.

Foster, I. and Kesselman, C., (eds.) *The Grid 2: Blueprint for a new Computing Infrastructure*, Morgan Kaufmann, 2004.

Granat, R. A., *Regularized Deterministic Annealing EM for Hidden Markov Models*, Ph.D. Thesis, University of California, Los Angeles, 2004.Granat, R., and A. Donnellan, A hidden Markov model tool for geophysical data exploration, *Pure and Appl. Geophys*, 2271–2284, 2002.

Grant L.B., A. Donnellan, D. McLeod, M. Pierce, G.C. Fox, A.Y. Chen, M.M. Gould, S.S. Sung, P.B. Rundle, A Web-Service Based Universal Approach to Heterogeneous Fault Databases, Computing in Science and Engineering Special Issue on Multi-Physics Modeling, July/Aug. 2005, p. 51- 57.

NASA Stennis Space Center, Decision Support Tools Evaluation Report For HAZUS-MH® Hurricane Model, Version 1.0, Earth Science Applications Directorate HAZUS-MH® DST Evaluation Team, John C. Stennis Space Center, Mississippi, October 2003.

Olshansky, R. R., and Y. M. Wu, Earthquake risk analysis for Los Angeles County under present and planned land uses, *Environ. and Planning B – Planning and Design*, **28** (3), 419-432, May 2001.

Parker, Jay, Andrea Donnellan, Gregory Lyzenga, John B. Rundle, Terry Tullis: Performance Modeling Codes for the QuakeSim Problem Solving Environment. International Conference on Computational Science: 855-862, 2003.

Rajasekar, A., Wan, M., Moore, R., Schroeder, W., Kremenek, G., Jugatheesan, A., Cowart, C., Zhu, B., Chen, S.Y., and Olschaowsky, R. "Storage Resource Broker - Managing Distributed Data in a Grid," *Computer Society of India Journal, Special Issue on SAN, Vol. 33, No. 4, pp. 4254*, Other Storage Resource Broker publications available from http://www.sdsc.edu/srb/Pappres/Pappres.htm, Oct 2003

Sayar, Ahmet, Mehmet Aktas, Galip Aydin, Marlon Pierce and Geoffrey Fox, "Developing a Web Service-Compatible Map Server for Geophysical Applications"

Technical report submitted to the 13th ACM International Symposium on Advances in Geographic Information Systems

The Open Grid Computing Environments Project Web Site: http://www.collab-ogce.org.

The Sakai Project Web Site: http://sakaiproject.org/

Tiampo, K.F., Rundle, J.B., McGinnis, S., and Klein, W. Pattern dynamics and forecast methods in seismically active regions, Pure and Applied Geophysics, 159, 2002.

Vretanos, P (ed.), *Web Feature Service Implementation Specification*, OpenGIS project document: OGC 02-058, version 1.0.0, 2002.

Zebker, H., J. Andrews, Y. Fialko, M. Glasscoe, B. Holt, K. Jezek, I. Joughin, Z. Lehner, B. Minster, P. Rosen, J. Rundle, J. Sauber, M. Simons, W. Thatcher, InSAR Workshop Summary Report, Oxnard, California, 64 pp., October 20–22, 2004.