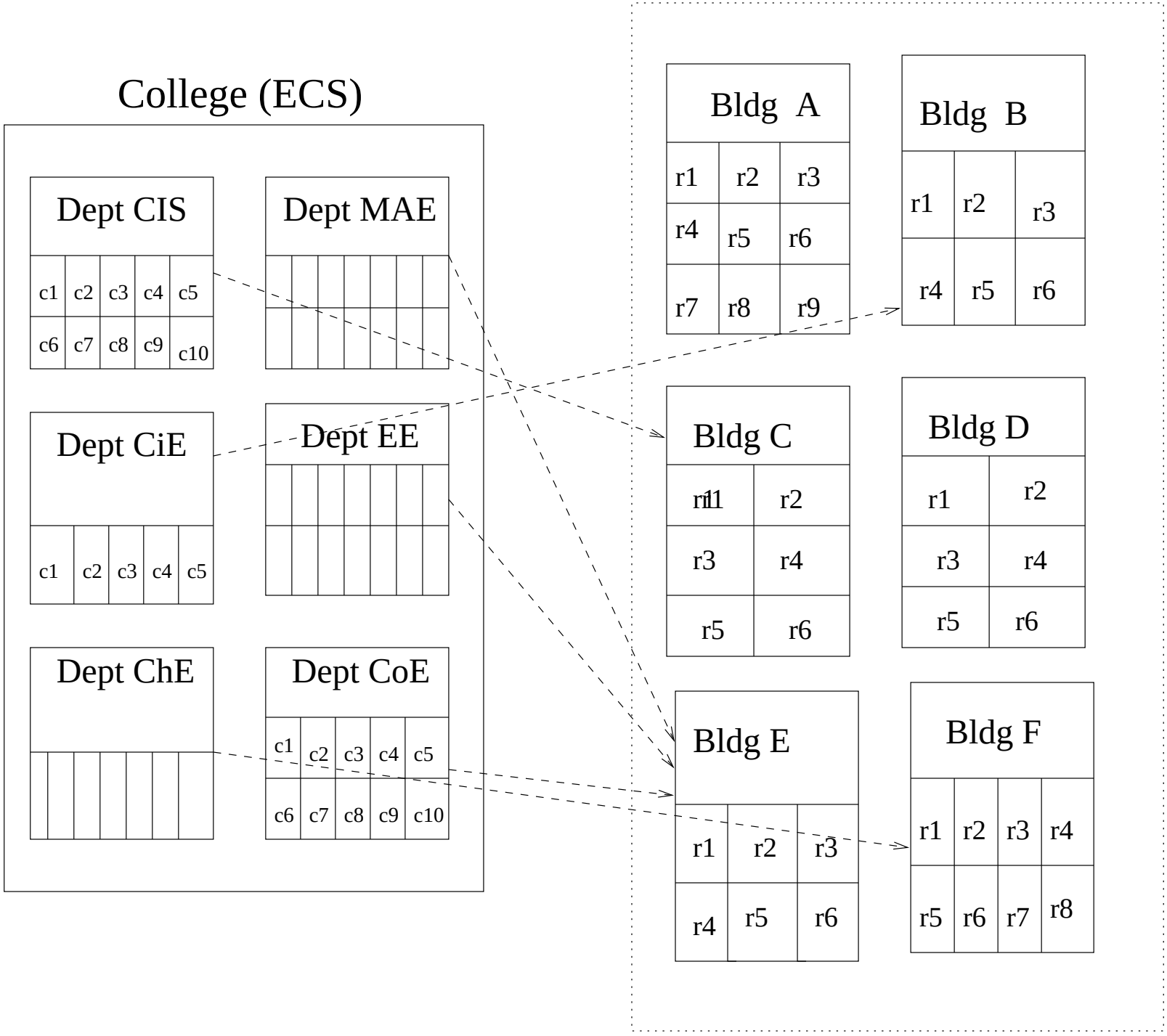
College (ECS)
Dept CIS
c1 c2 c3 c4 c5
c6 c7 c8 c9 c10
Dept MAE
Dept CiE
c1 c2 c3 c4 c5
Dept EE
Dept ChE
Dept CoE
c1 c2 c3 c4 c5
c6 c7 c8 c9 c10
Bldg A
r1 r2 r3
r4 r5 r6
r7 r8 r9
Bldg B
r1 r2 r3
r4 r5 r6
Bldg C
r1 r2
r3 r4
r5 r6
Bldg D
r1 r2
r3 r4
r5 r6
Bldg E
r1 r2 r3
r4 r5 r6
Bldg F
r1 r2 r3 r4
r5 r6 r7 r8