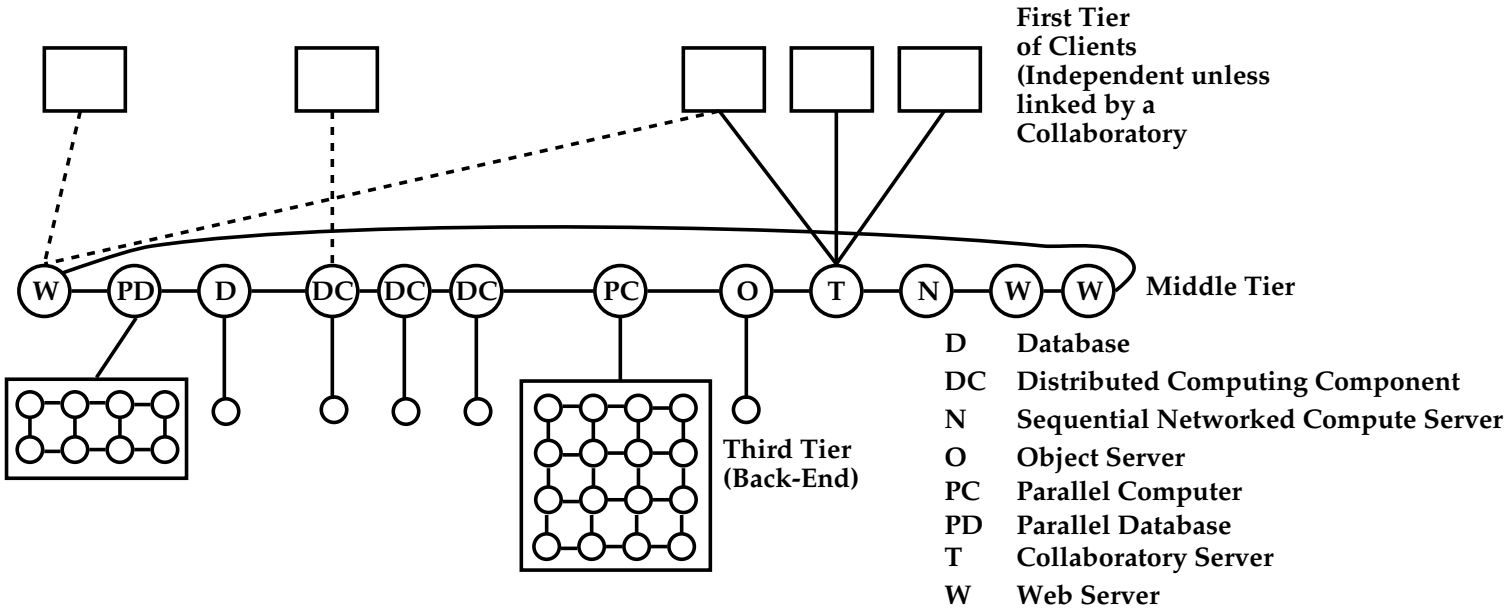
First Tier
of Clients
(Independent unless
linked by a
Collaboratory
W
PD
D
DC
DC
DC
PC
O
T
N
W
W
Middle Tier
Third Tier
(Back-End)
D Database
DC Distributed Computing Component
N Sequential Networked Compute Server
O Object Server
PC Parallel Computer
PD Parallel Database
T Collaboratory Server
W Web Server