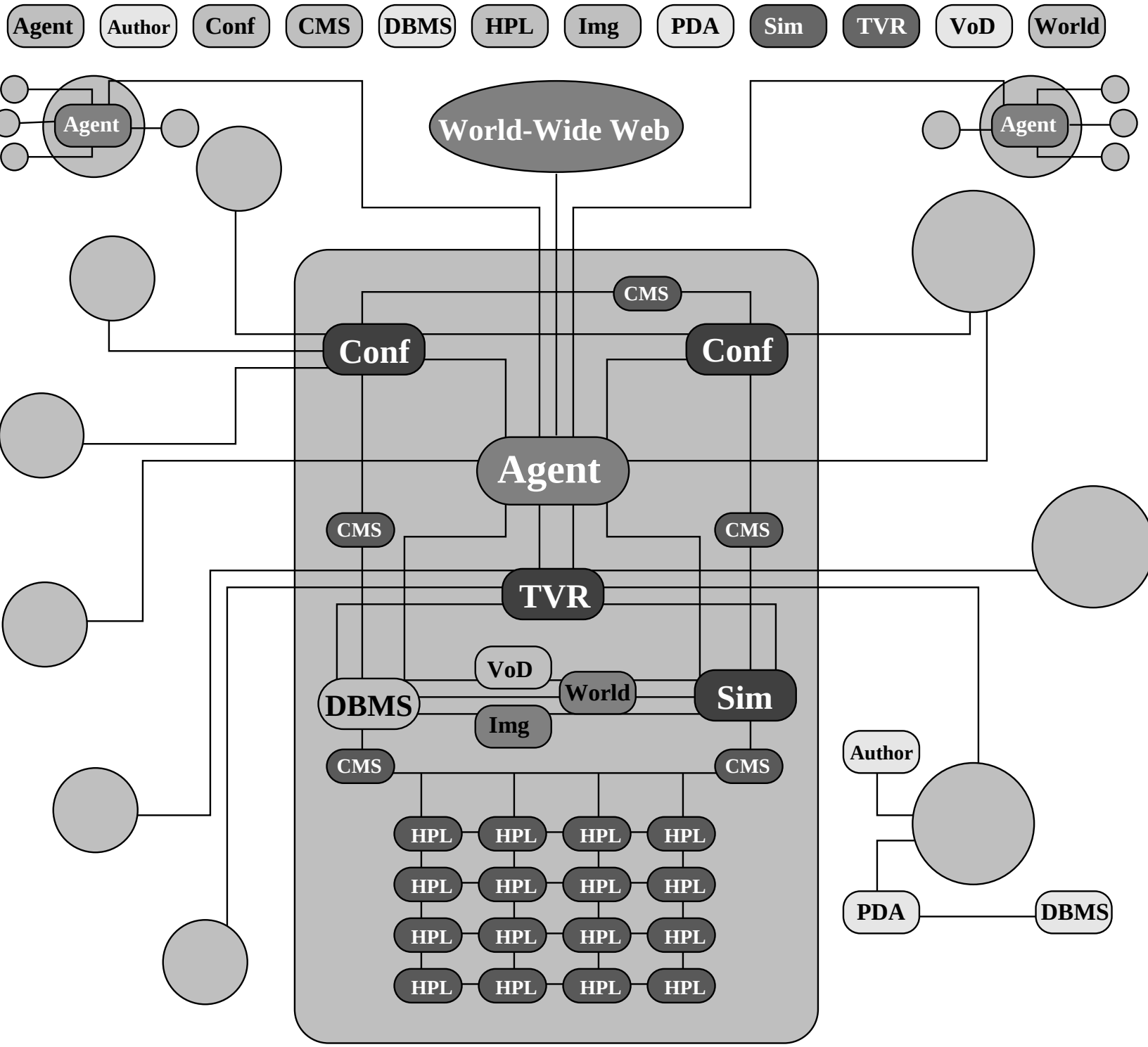
Agent
Author
Conf
CMS
DBMS
HPL
Img
PDA
Sim
TVR
VoD
World
Agent
World-Wide Web
Agent
CMS
Conf
Conf
Agent
CMS
CMS
TVR
VoD
DBMS
World
Sim
Img
CMS
CMS
Author
HPL
PDA
DBMS